IPA Intelligent Parker Amplifier

Hardware Installation Guide



Effective: December, 2014

Document Number: 88-032500-01A

ENGINEERING YOUR SUCCESS.

User Information



Warning: **IPA products are used to control electrical and mechanical components of motion control systems. You should test your motion system for safety under all potential conditions. Failure to do so can result in damage to equipment and/or serious injury to personnel.**

IPA products and the information in this guide are the proprietary property of Parker Hannifin Corporation or its licensers, and may not be copied, disclosed, or used for any purpose not expressly authorized by the owner thereof.

Since Parker Hannifin constantly strives to improve all of its products, we reserve the right to change this guide, and software and hardware mentioned therein, at any time without notice.

In no event will the provider of the equipment be liable for any incidental, consequential, or special damages of any kind or nature whatsoever, including but not limited to lost profits arising from or in any way connected with the use of the equipment or this guide.

© 2014 Parker Hannifin Corporation
All Rights Reserved

Contact Information for Technical Assistance

Contact your local automation technology center (ATC) or distributor.

North America and Asia
Parker Hannifin
Electromechanical Automation North America
5500 Business Park Drive
Rohnert Park, CA 94928
Telephone: (707) 584-7558
Fax: (707) 584-8029
Email: emn_support@parker.com
Internet: http://www.parkermotion.com

Europe
Parker Hannifin
Electromechanical Automation Europe
Robert-Bosch-Strasse 22
77656 Offenburg (Germany)
Telephone: +49 (0781) 509-0
Fax: +49 (0781) 509-98176
Email: em-motion@parker.com
Internet: www.parker.com/eme

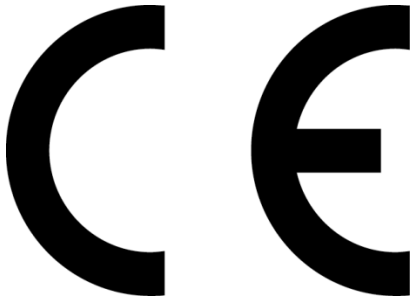

Product Type: IPA Drive Controllers, including IPA04-HC and IPA15-HC

The above product complies with the requirements of directives:

- EMC Directive 2004/108/EC
- Low Voltage Directive 2006/95/EC
- CE Marking Directive 93/68/EEC

This product has been shown to meet the requirements of both UL61800-5-1UL508C as a Recognized Component, and the European Union CE requirements for Marking (93/68/EEC), Safety (IEC 61010-1 ed3.0 per 2006/95/EC Low Voltage Directive) and Electromagnetic Compatibility (IEC 61800-3 ed2.0 per 204/108/EC) when installed, operated and maintained as described in the product User Guide.

Per IEC 61800-3 ed2.1 section 3.2.5, the IPA is considered a PDS (Power Drive System) of rated voltage less than 1000V, intended for use in the second environment (industrial) and not intended for direct use in the first environment (residential). This means only those individuals familiar with the EMC requirements of power drive systems should install this product and that this product is designed for connection to mains distribution networks other than low-voltage networks, which may supply domestic premises. The drives can tolerate atmospheric pollution degree 2, which means only dry, non-conductive pollution is acceptable.



Warning: **Risk of damage and/or personal injury.**
The IPA described in this guide contains no user-serviceable parts.
Attempting to open the case of any unit, or to replace any internal component, may result in damage to the unit and/or personal injury.
This may also void the warranty.

The following symbols appear in this guide:

Symbols	Description
	Protective Earth Ground
	Functional Earth (Ground) Terminal
	Shield, Frame, or Chassis Terminal
	Digital Ground
	Isolated Ground
	Caution Risk of Electrical Shock
	Caution, Refer to Accompanying Documentation

Important Safety Information

It is important that motion control equipment is installed and operated in such a way that all applicable safety requirements are met. It is your responsibility as an installer to ensure that you identify the relevant safety standards and comply with them; failure to do so may result in damage to equipment and personal injury. In particular, you should study the contents of this user guide carefully before installing or operating the equipment.

The installation, set up, test and maintenance procedures given in this user guide should only be carried out by competent personnel trained in the installation of electronic equipment. Such personnel should be aware of the potential electrical and mechanical hazards associated with mains-powered motion control equipment—please see the safety warnings below. The individual or group having overall responsibility for this equipment must ensure that operators are adequately trained.

Under no circumstances will the suppliers of the equipment be liable for any incidental, consequential or special damages of any kind whatsoever, including but not limited to lost profits arising from or in any way connected with the use of the equipment or this guide.

Warning: **High-performance motion control equipment is capable of producing rapid movement and very high forces. Unexpected motion may occur especially during the development of controller programs. KEEP WELL CLEAR of any machinery driven by stepper or servo motors. Never touch any part of the equipment while it is in operation.**

This product is sold as a motion control component to be installed in a complete system using good engineering practice. Care must be taken to ensure that the product is installed and used in a safe manner according to local safety laws and regulations. In particular, the product must be positioned such that no part is accessible while power may be applied.



This and other information from Parker Hannifin Corporation, its subsidiaries, and authorized distributors provides product or system options for further investigation by users having technical expertise. Before you select or use any product or system, it is important that you analyze all aspects of your application and review the information concerning the product in the current product catalog. The user, through its own analysis and testing, is solely responsible for making the final selection of the system and components and assuring that all performance, safety, and warning requirements of the application are met.

If the equipment is used in any manner that does not conform to the instructions given in this user guide, then the protection provided by the equipment may be impaired.

The information in this user guide, including any apparatus, methods, techniques, and concepts described herein, are the proprietary property of Parker Hannifin or its licensors, and may not be copied disclosed, or used for any purpose not expressly authorized by the owner thereof.

Since Parker Hannifin constantly strives to improve all of its products, we reserve the right to modify equipment and user guides without prior notice. No part of this user guide may be reproduced in any form without the prior consent of Parker Hannifin.

Contents

User Information **3**

Contact Information for Technical Assistance 3

Symbols 5

Description 5

Important Safety Information **6**

Contents **7**

CHAPTER 1 Introduction **14**

IPA Controllers—Overview **15**

IPA Product Description 15

IPA Part Numbers 15

Input Power Level 16

Output Power Level 16

Servo Motor Drives 16

Components 16

Options 16

Checking Your Shipment **17**

Illustrations in this Installation Guide **17**

Assumptions of Technical Experience **17**

Technical Support **17**

CHAPTER 2 Mechanical Installation **18**

Environment & Drive Cooling **19**

Cabinet Cooling 20

IPA04-HC Model 20

IPA15-HC Model 20

Cabinet Cooling Calculations 20

Dimensions 21

Drive Dimensions 21

Weight 22

Mounting Guidelines 22

Cable Routing 22

Panel Routing 23

CHAPTER 3 Electrical Installation 24

Installation Safety Requirements 25

Precautions 25

System Installation Overview 26

Connectors 27

X1 – Output Power Connector 28

X2 – Input Power / Mains Connector 29

Factory Installed Jumpers 30

X6 – Motor Feedback Connector 30

Motor Feedback Connector Pinout 31

Internal Connections 32

Encoder Inputs 32

Motor Power & Feedback Cables 33

X5 – Drive I/O Connector 35

Sample Wiring 35

Drive I/O Cable 36

Drive I/O Connector Pinout 37

Internal Connections 38

Inputs—High-Speed/Auxiliary Encoder 39

Inputs—General Purpose 40

Outputs—General Purpose 40

X7 – Auxiliary (Control Power, Torque Enable, Analog Input) 40

Output (Motor) Power 42

Output Power Ratings 42

Output (Motor) Power Connections 42

Power Supply 43

Input Power 43

Fuse Requirements 43

Motor Power Fuse Information 43

Control Power Fuse Information 44

Drive Inrush Current 44

Power Supply Connections 44

Earth Ground 45

Single-Source (Motor Input Power) Connections 45

Separate Sources Connections 46

Multiple Drive/Controller Installations 47

Safety Earth Connection 47

Brake Relay (Optional) 47

Brake Relay Connector (on Output Power Connector) 48

Brake Relay Operation 48

Brake Relay Specifications 48

Brake Relay Connection 49

Brake Relay to Motors with Full Wave Rectifiers 50

Brake Relay to Motors without Full Wave Rectifiers 51

Regeneration Protection 52

Regeneration Connection 52
Internal Regeneration Capability 53
CHAPTER 4 Communications 54
Overview 55
Ethernet Specifications 55
Ethernet Cable Specification 55
Ethernet Connector 55
Ethernet Connector Pinout 56
RJ-45 LED Ethernet Status Indicators 56
Assigning IP Addresses 56
Setting the IP Address— IPA 56
Setting the IP Address and Subnet Mask—PC 57
Connecting to a PC 60
Verifying the IP Address 60
LED Status Indicators 61
Ethernet Network Status 62
Drive/Controller Status ..... **Error! Bookmark not defined.**
CHAPTER 5 Troubleshooting 63
General Troubleshooting Guidelines 64
Power 64
Communications 65
RJ-45 Ethernet Status LEDs 65
Ethernet Network Status LED 66
ACR-View 67
Motor Control 68
Fault Correction 69

Error Codes 69
Hall Sensors 72
Troubleshooting Checklist 72
Possible Problems 72
Procedures 73
CHAPTER 6 Torque Enable Safety Circuitry 78
Torque Enable Functional Description 79
User Connections 80
Torque Enable Technical Specification 80
Ideal Operation 81
Typical Operation 82
Fault Operation 82
CHAPTER 7 Additional Specifications 84
Amplifier 85
Performance 85
Protective Circuits 85
Short Circuit Protection 85
Resetting the fault 86
Drive/Controller Over-Temperature Protection 86
Threshold Temperature 86
Resetting the fault 86
Under-Voltage Protection 87
Threshold Voltage 87
Resetting the fault 87
Over-Voltage Protection 87
Threshold Voltage 88

Resetting the fault 88
Current Foldback 88
Cables 89
EMC Ready Cables 89
Non-EMC Cables 89
CHAPTER 8 Regulatory Compliance UL and CE 90
System Installation Overview 91
General Safety Considerations 91
General EMC Considerations 91
Installing the IPA Drive 92
Precautions 92
A Safe Installation – Meeting the Requirements of the Low Voltage Directive (LVD) 92
A Highly-Immune, Low-Emission Installation – Meeting the Requirements of the Electromagnetic Compatibility (EMC) Directive 93
Control Power 95
Mains Motor Power 95
Panel Installation, IPA04-HC to IPA15-HC 97
Panel Mounting 98
Regulatory Agencies 99
Standards of Compliance 99
APPENDIX A VM25 Expansion Module 102
Overview 103
APPENDIX B IPA with IForce or Ripped Linear Servos 104
IForce/Ripped to IPA-Controller Wiring 105
Limit and Home Sensor Connections 107
IPA Thermal Model Protection and Power Installation 107
Software Configuration: Select Coil Part Number 108

Software Configuration: Set Feedback Resolution **109**

Software Configuration: Thermal Sensor Type **111**

Software Configuration: Position Error & Soft Limits **112**

Software Configuration: End of Travel (EOT) Limits & Home **113**

APPENDIX C IPA with Parker Mechanics **114**

IPA with Parker Mechanics **115**

Parker Gearhead Gear Ratios 118

Limit/Home Sensor Wiring **120**

IForce and Ripped Positioners with Connector Box Option 120

P8S Global Drop-In Solid State Sensors **127**

P8S Mini-Global Drop-In Solid State Sensors **128**

CHAPTER 1
Introduction

IPA Controllers—Overview

The IPA is a single-axis drive/controller based on the IPA drive platform. Setup and programming is accomplished using the AcroBASIC language within the ACR-View programming environment.

IPA Product Description

The IPA is a single-axis digital servo drive with controller capability. The drive closes position, velocity, and torque loops, receiving its position setpoints from an internal servo controller. ACR-View is used to configure and program the IPA. There are five models with a maximum continuous shaft power of 400, 1500 watts.

IPA Part Numbers

The following diagram explains the IPA part numbers:

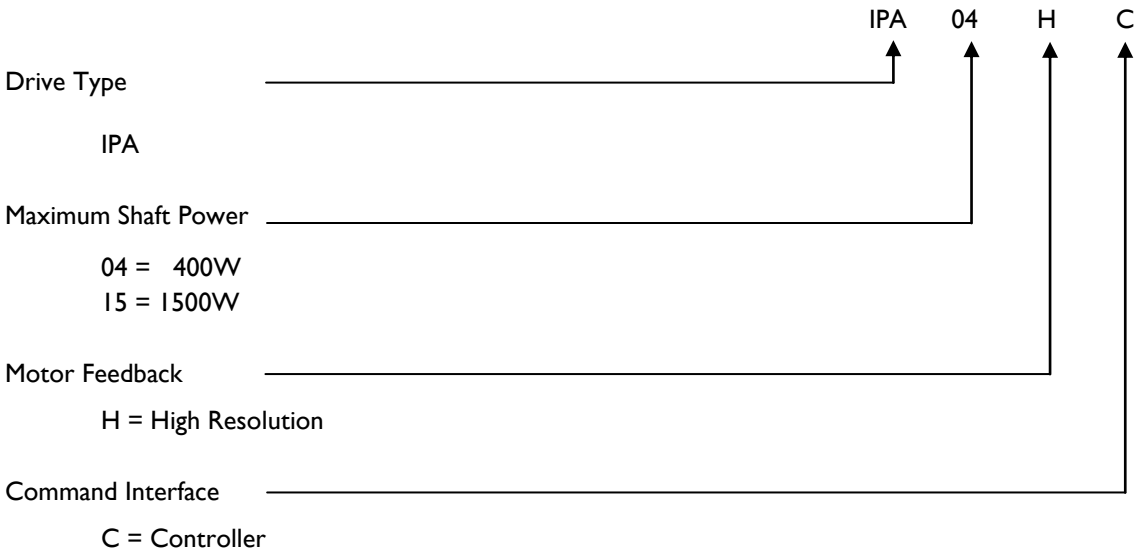

Input Power Level

Model Number	Description
Motor Input Power	
IPA04-HC, IPA-15HC	120/240 VAC single-phase mains motor input power
Control Input Power	
IPA04-HC, IPA-15HC	120/240 VAC single-phase mains motor input power

Output Power Level

Servo Motor Drives

In the following table, the maximum current is given at 120/240 VAC input, which equates to a motor bus voltage of 170/340 VDC.

Output Power Level

Model	Continuous Shaft Output Power (Watts)	Continuous Current (RMS)	Peak Current (RMS)
IPA04-HC	400	3.00	9.00
IPA15-HC	1500	6.30	18.90

Components

For information about cables, motors, and other motion-control-system components see “Chapter 2 Mechanical Installation” on page 18.

Options

For the latest additions, see our website at www.parkermotion.com.

Checking Your Shipment

Confirm that you have received all items in the table below. These items ship with the following drives: IPA. If you are missing an item, call the factory. For contact information, see Contact Information for Technical Assistance at the beginning of this guide.

The following items ship with the IPA drives:

Controller Ship Kit	
Part Name	Part Number
IPA Connector, 6 pin (Motor)	43-021068-01
Connector, 7 pin (Power) with jumper wires (22AWG) (x2)	43-021069-01 44-015741-01
Connector 2 pin (Hiperface DSL)	43-032404-01
Connector, 2x6 pin (EN, AUX)	43-032405-01
R-Clamp	52-019734-01
Screw (8-32 $^{3}/_{8}$ inch)	51-006055-01

Illustrations in this Installation Guide

Typically, the illustrations in this guide show the IPA, which is representative of all IPA Controller models. All models have the same external features and housing, although the power level and height of the heat sink fins differ.

Assumptions of Technical Experience

The IPA Controller is designed for industrial applications. To effectively install and troubleshoot the drive, you must have a fundamental understanding of the following:

- Motion control applications
- Electromechanical actuators
- Voltage, current, switches, and other electrical concepts
- Basic Programming

Technical Support

For solutions to questions about implementing the drive, first refer to this manual. If you cannot find the answer in this documentation, contact your local Automation Technology Center (ATC) or distributor for assistance.

If you need to talk to our in-house Application Engineers, please contact us at the telephone numbers listed in the "Contact Information for Technical Assistance" table on page 3.

CHAPTER 2
Mechanical Installation

Environment & Drive Cooling

The IPA drive operates in an ambient temperature range of 0°C (32°F) to 50°C (120°F) ambient air temperature. The drive can tolerate atmospheric pollution degree 2. Only dry, non-conductive pollution is acceptable. Therefore, it is recommended that the drive be mounted in a suitable enclosure.

For drive cooling, you must install the drive so that the heat sink fins are vertical. Figure 2 on page 23 shows the mounting orientation, as well as the minimum top, bottom, and side installation clearances.

NOTES:

- **Avoid installing heat-producing equipment directly below a drive.**
- **Make sure the ambient air temperature entering the drive or rising up to the drive is within acceptable ambient temperature limits. Under normal use, the temperature of air leaving the drive and heat sink may be 25°C (45°F) above ambient temperature.**
- **After installation, verify that the ambient air temperature directly below the top-most drive does not exceed the maximum Ambient Air Operating Temperature shown below. In addition, make sure that nothing obstructs the circulating airflow.**

Environmental Specifications

Operating Temperature	Maximum 50°C (120°F)
Ambient Air	Minimum 0°C (32°F)
Storage Temperature	–40°C to 85°C (–40°F to 185°F)
Humidity	0 to 95%, non-condensing
Shock	15g, 11 ms half-sine
Vibration	10 to 2000 Hz at 2g
Pollution Degree	2 (per IEC 61010)
Installation Category	2 (per IEC 61010)

Cabinet Cooling

Use the cabinet loss and power dissipation values in this section along with the formula in "Cabinet Cooling Calculations" below to calculate cabinet cooling for each installation. Following are tables showing power dissipation for various drive/controller and motor combinations.

IPA04-HC Model

Power Dissipation for IPA (400 Watt Model)

Voltage	Shaft Power		
	0W	200W	350W
120 VAC	13W	28W	42W
240 VAC	25W	40W	57W

IPA15-HC Model

The following values have been measured using the Parker MPM1421CSJXXXN motor.

Power Dissipation for IPA Cabinet Cooling Calculations

Voltage	Shaft Power		
	0W	700W	1300W
120 VAC	14W	82W	130W
240 VAC	25W	95W	146W

Cabinet Cooling Calculations

Use the motor's speed torque curve to determine the torque when the motor is at running speed for your application. If the torque is not known, use the "knee" of the graphed motion (where the peak-torque curve intersects the continuous-torque curve)—this assumes the worst-case scenario for continuous motion.

$$P_{Loss} = \frac{P_{MOTOR}}{E_{MOTOR}} * (1 - E_{DRIVE})$$

P_{Loss} = power dissipated to cabinet (Watts)

P_{MOTOR} = shaft power of the motor (Watts)

E_{MOTOR} = efficiency of motor, approximately 0.85

E_{DRIVE} = efficiency of drive, approximately 0.90

Dimensions

There is one basic housing size, although the length of the heat sink fins varies with each model. This section contains the dimensions of all models.

Drive Dimensions

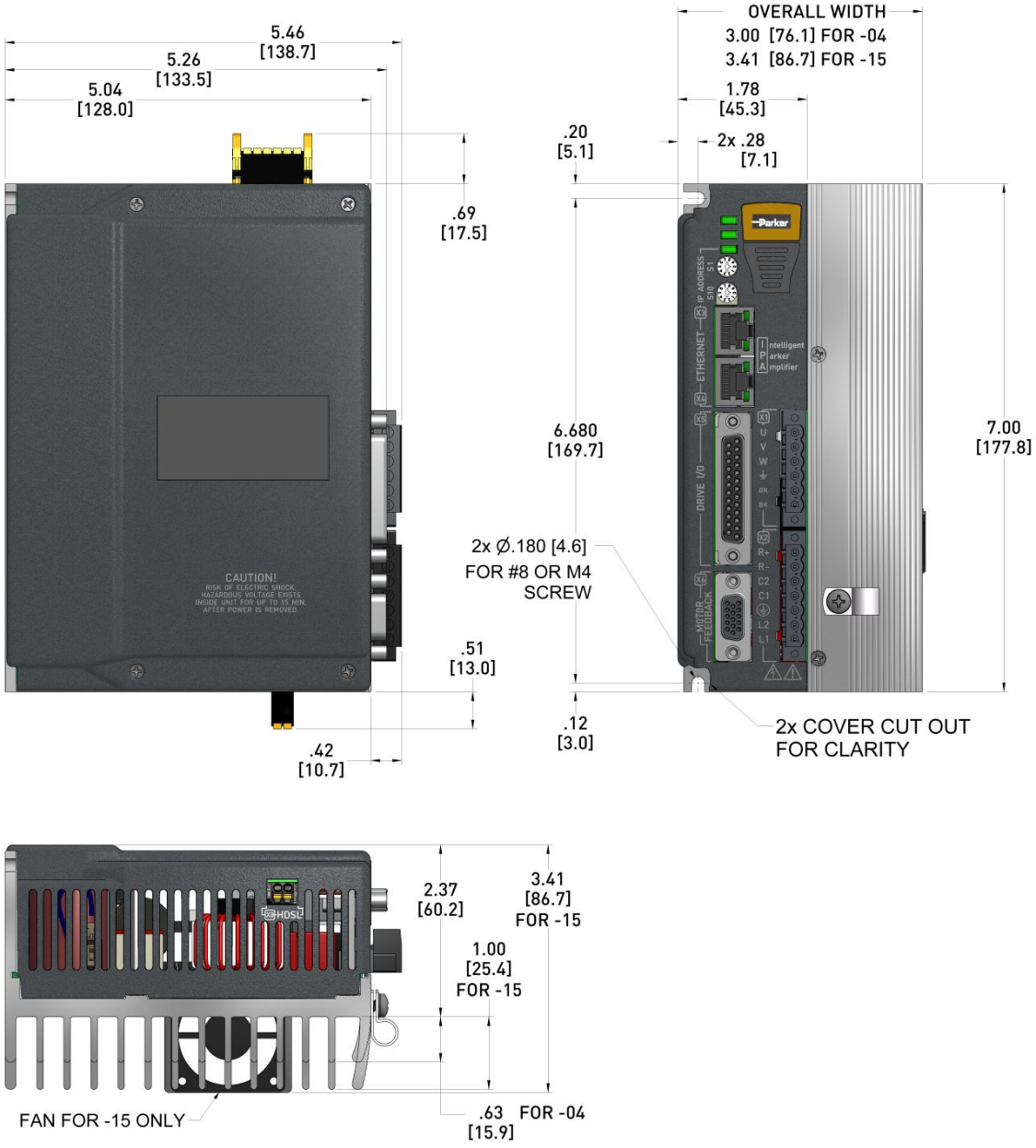

Figure 1. - *IPA Drive Dimensions*

Weight

The following table lists the weight of each drive/controller model.

Drive/Controller Weights

Drive/Controller	Weight pounds (kg)
IPA04-HC	3.2 (1.5)
IPA15-HC	3.7 (1.7)

Mounting Guidelines

The IPA is a vented product. To prevent material spilling into the drive, mount it under an overhang or in a suitable enclosure.

IPA products are made available under "Restricted Distribution" for use in the "Second Environment" as described in the publication EN 61800-3 ed2.0.

Cable Routing

Route high power cables (motor and mains) at right angles to low power cables (communications and inputs/outputs). Never route high and low power cables parallel to each other.

Panel Routing

The minimum clearance between IPA is 0.62 inches (15.75mm). The minimum clearance above and below a drive is 1 inch (25.4 mm). The following figure demonstrates these clearance requirements.

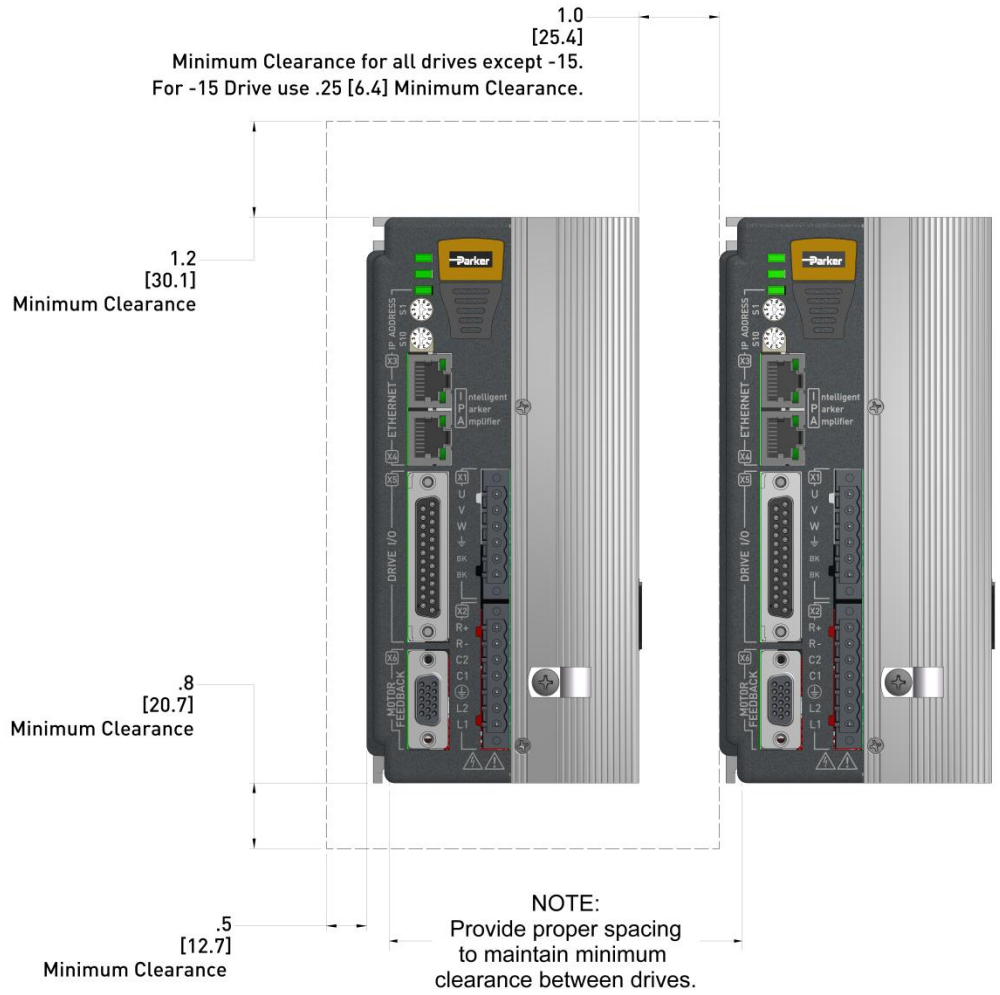

Figure 2. - *Panel Layout Dimensions for All IPA Models*

CHAPTER 3
Electrical Installation

Installation Safety Requirements

IPAs meet the requirements of both the European LVD (Low Voltage Directive) and EMC (Electromagnetic Compliance) directives when installed according to the instructions given within "Chapter 8 Regulatory Compliance UL and CE."

As a rule, it is recommended that you install the drive/controller in an enclosure to protect it from atmospheric contaminants and to prevent operator access while power is applied. Metal equipment cabinets are ideally suited for housing the equipment because they provide operator protection and EMC screening, and can be fitted with interlocks arranged to remove all hazardous motor and drive power when the cabinet door is opened.

Do not arrange the interlocks to open circuit the motor phase connections while the system is still powered as this could damage the drive/controller.

Precautions

During installation, take the normal precautions against damage caused by electrostatic discharges.

- Wear earth wrist straps.
- Include a mains power switch or circuit breaker within easy reach of the machine operator. Clearly label the switch or breaker as the disconnecting device.



Warning: **High-performance motion control equipment is capable of producing rapid movement and very high forces. Unexpected motion may occur especially during the development of controller programs. KEEP WELL CLEAR of any machinery driven by stepper or servo motors. Never touch any part of the equipment while it is in operation.**

System Installation Overview

This section details the components and configuration necessary for electrical installation of all models of the IPA.

Installation of a motion control system requires an IPA, a compatible motor (listed on page 17), and access to a computer. Refer to the following figure for a diagram of this system.

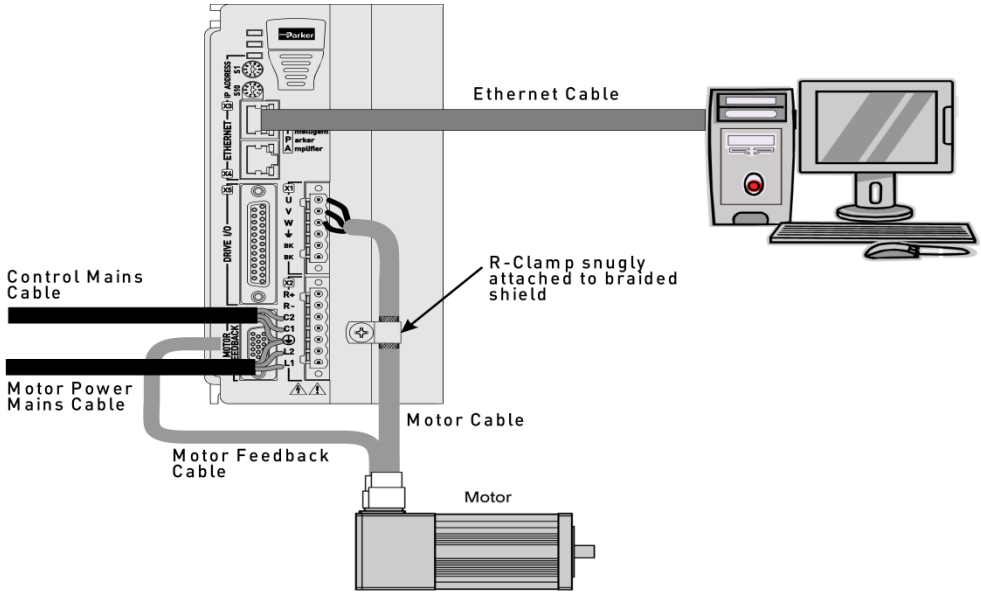

Figure 3. - *System Installation Overview*

Warning: **This product has been developed for industrial environments. Due to exposed high voltage terminals, this product must not be accessible to users while under normal operation.**

IMPORTANT: **An R-clamp must be connected to the drive and snugly attached to the exposed braided shield of the motor cable in order to control electrical noise.**

Connectors

All IPA models have the same set of connectors. Connector specifications are in this section and also "Chapter 7 Additional Specifications."

The following figure shows the name and location of the connectors.

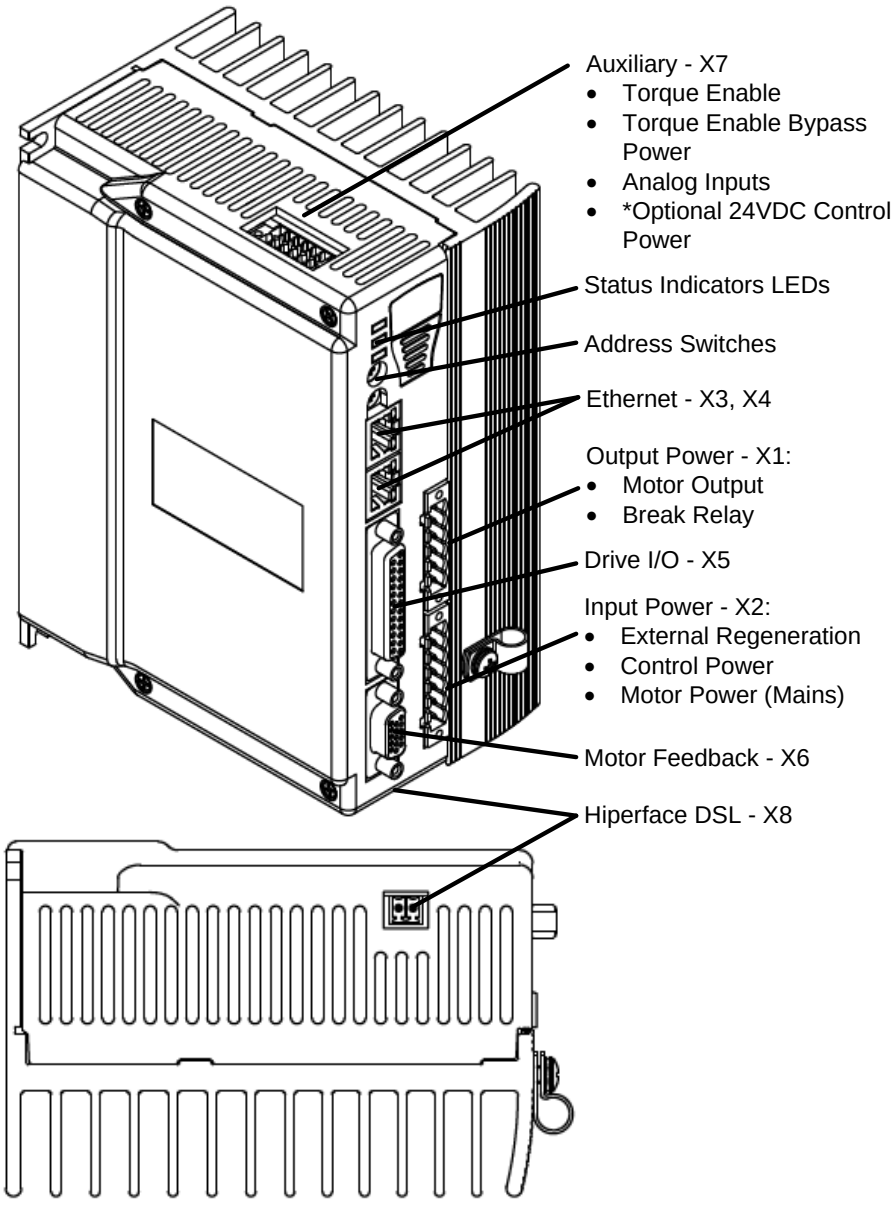

Figure 4. - *IPA Connectors*

X1 – Output Power Connector

The drive's Motor screw terminal connector provides output power to the motor. For connection information, see "Output (Motor) Power" on page 42.

The drive's Motor connector provides terminals U, V, W and ⏚ for connecting output power to the motor. It also serves to connect an external motor brake to the drive's internal solid-state relay on the two BK terminals. This connector is removable.

Motor Screw Terminal Connector Specifications

Description	Specification
Connector Type	Removable screw terminal
Terminals	6
Pitch	0.200 in (5.08 mm)
Wire range	12-26 AWG 14-27 SWG (0.12-3.30 mm^2)
Wire strip length	0.310 in (8 mm)
Torque	7.0 in–lbs nom. (0.79 N-m)

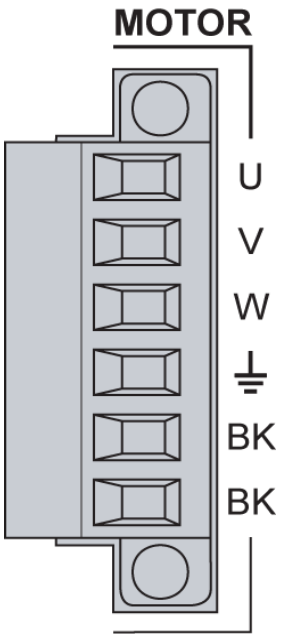

Figure 5. - *Output Power Connector*

X2 – Input Power / Mains Connector

The Input Power / Mains connector contains terminals for external regeneration, control power, and motor power. Do not connect power to this connector before reading the section "Power Supply" on page 43.

The Input Power / Mains connector provides terminals L1, L2, and ⏚ for connecting motor mains power. It also serves to connect Control power through terminals C1 and C2, and a power dissipation resistor on terminals R+ and R–. The connector is removable.

Input Power / Mains Connector Specifications

Description	Specification
Connector Type	Removable screw terminal
Terminals	7
Pitch	0.200 in (5.08 mm)
Wire range	12-26 AWG 14-27 SWG (0.12-3.30 mm^2)
Wire strip length	0.31 in (7.87 mm)
Torque	7.0 in–lbs nom. (0.79 N-m)

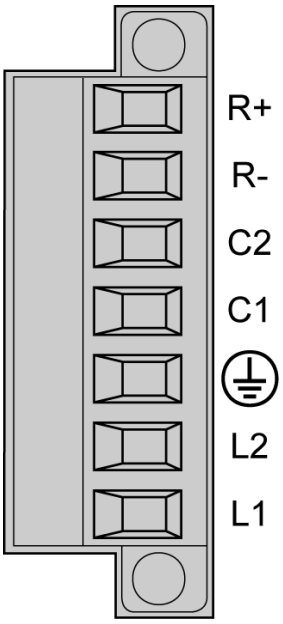

Figure 6. - *Input Power/Mains Connector*

IMPORTANT: Power to the IPA can be supplied in two ways. See the section "Power Supply" on page 43 before proceeding with connecting the unit to power.

Factory Installed Jumpers

The IPA comes with external jumpers installed in the Input Power / Mains connector from C1 to L1, and C2 to L2. Figure 7 shows the location of the factory installed jumpers.

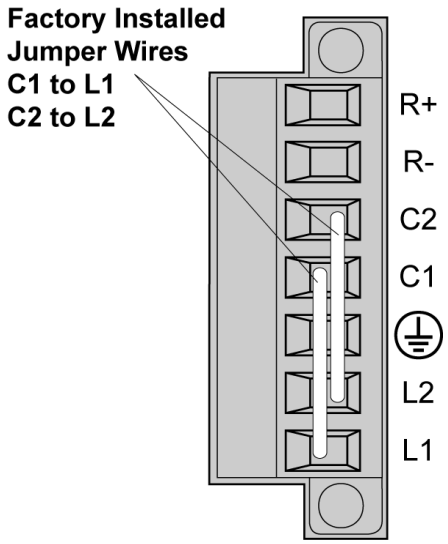

Figure 7. - *Factory-Installed Jumpers on Input Power/Mains Connector*

X6 – Motor Feedback Connector

Inputs for the encoder feedback, motor thermal switch, and hall effects are located on the 15-pin Motor Feedback connector.

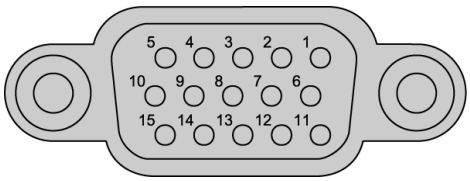

Figure 8. - *Motor Feedback Connector, Female*

Motor Feedback Connector Specification

Description	Specification
Connector Type	15-Pin High Density D-Subminiature (female socket)
Manufacturer	KYCON or equivalent
KYCON Part Number	K66-E15S-NR

Motor Feedback Connector Specification—Mating Connector[1]

Description	Specification
Connector Type	15-Pin High Density D-Subminiature (male connector)
Manufacturer	AMP or equivalent
Cable Kit includes:	AMP Part Number 748473-1: • 748364-1 connector • shield • enclosure • two jack screws • (does not include contacts or ferrules)
Contacts	Crimp style: • 30 µ" Gold—AMP Part Number 748333-4 • Gold Flash—Amp Part Number 748333-7

Mating connectors are not provided with the drive. Parker cables are available with mating connectors attached.

IMPORTANT: Encoder inputs use a DS26LV32 differential line receiver. Parker Hannifin recommends 26LS31 (or compatible) differential line driven encoders. Single ended encoders are supported but not recommended for noisy environments.

Motor Feedback Connector Pinout

Pinout configuration for the Motor Feedback connector is listed in the following table. A box surrounding pins indicates a requirement for twisted pair wiring.

Motor Feedback Connector Pinout

Signal	Pin	Description
ENC Z+ / DATA+	1	Encoder Z Channel in
ENC Z– / Data–	2	Encoder Z Channel in
DGND	3	Encoder power return
+5 VDC	4	+5 VDC Encoder power
+5 VDC	5	+5 VDC Hall power
DGND	6	Hall power return
ENC A– / SIN–	7	Encoder A Channel in
ENC A+ / SIN+	8	Encoder A Channel in
Hall 1 / SCLK+ *	9	Hall 1 input
Thermal+	10	Motor thermal switch/thermistor
Thermal–	15	Motor thermal switch/thermistor
ENC B–/ COS–	11	Encoder B Channel in
ENC B+ / COS+	12	Encoder B Channel in
Hall 2 / SCLK– *	13	Hall 2 input
Hall 3	14	Hall 3 input

* When using the SinCos protocol, pins 9 and 13 require twisted pair wiring. Note: Twisted pairs are outlined by a box.

Internal Connections

The following figure shows a schematic diagram of the internal connections for the Motor Feedback connector.

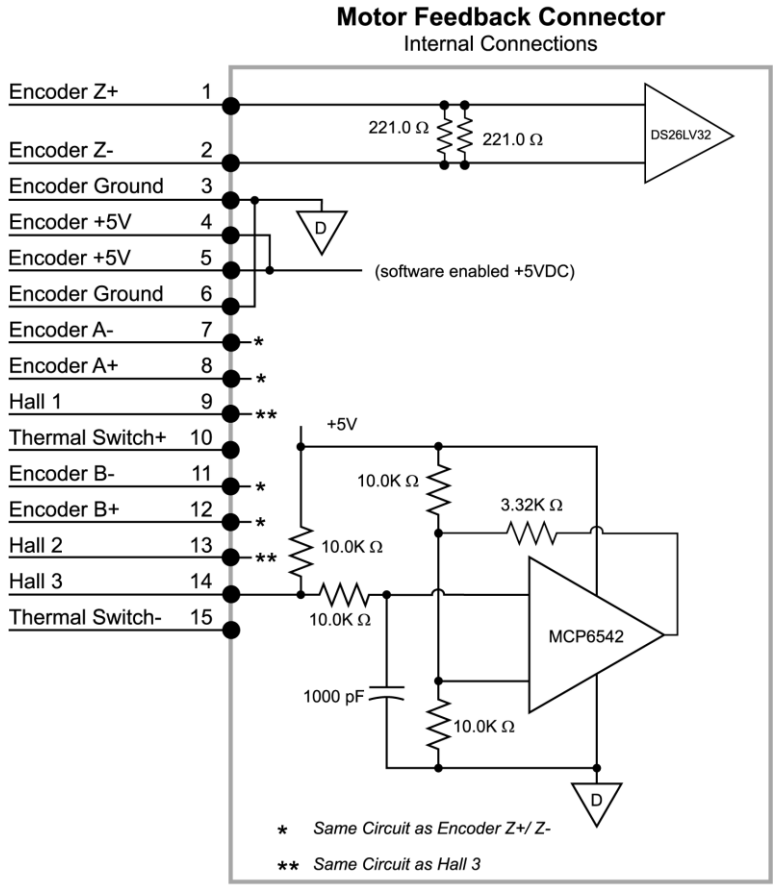

Figure 9. - *Internal Circuit Diagram for the Motor Feedback Connector*

Encoder Inputs

Encoder input requirements are listed in the table below.

Encoder Inputs

Description	Min	Typical	Max	Units
Common Mode Range	-7		+7	V
Current—Encoder			250	mA
Current—Hall			250	mA
Differential Threshold Voltage	-200		+200	mV
Differential Termination Impedance		120		ohms
Thermal Switch Current			2	mA
Thermal Switch Voltage Maximum (supplied)			15	V
Primary Encoder Input Frequency (pre-quadrature)			1.6	MHz

Note: All parameters are at the connector pin.

Motor Power & Feedback Cables

Parker cables are available with mating connectors attached for most Parker motors.

Mating Cables for IPA to Parker Rotary Motors

Motor Connector Type	Motor Cable	Feedback Cable (incremental encoder)	Feedback Cable (EnDat absolute encoder)
C1	71-030630-XX	71-030631-XX	N/A
PS	P-1A1-XX (0-6A) P-3B1-XX (>6 amps)	F-1A1-XX	F-1A2-XX
PS	High Flex: PH-1A1-XX (0-6A) PH-3B1-XX (>6 amps)	High Flex: FH-1A1-XX	High Flex: FH-1A2-XX

-xx denotes cable length in feet. Cable drawings available on website.

Rotary Motor Connector and Encoder Options

Motor Series	Encoder Code	Connector Options	Description	Controller Resolution
MPE	4E	C1	2500 Line Encoder	10000 ppr
MPP MPJ MPW	1E	PS	2000 Line Encoder	8000 ppr
	7D or 8D	PS	Multi-turn Absolute, Heidenhain EnDat 19bit	524288 ppr, 4096 turns
BE	J	PS	2000 Line Encoder	8000 ppr
	L	PS	5000 Line Encoder	20000 ppr
SM	E	PS	1000 Line Encoder	4000 ppr
	L	PS	5000 Line Encoder	20000 ppr
N	E	PS	1000 Line Encoder	4000 ppr
J	E	PS	1000 Line Encoder	4000 ppr
SMN	2F	PS	2048 Line Encoder	8192 ppr
MPM	JM	5	1000 Line Encoder	4000 ppr
	JN	5	2000 Line Encoder	8000 ppr
	JQ	5	5000 Line Encoder	20000 ppr

Linear Servo Motor Power and Feedback Cables

Motor Model	Description	Power Cable P/N
TxxxxxxxxNxxLAx TxxxxxxxxNxxMAx TxxxxxxxxNxxZAx TxxxxxxxxNxxZAx	IForce & Ripped positioners with connector box option, high flex	006-1740-mm
404LXRxxx	Linear servo positioner with connector box, high flex	006-1741-mm
406LXRxxx 412LXRxxx	Linear servo positioner with connector box, high flex	006-1740-mm

Motor Model	Description	Feedback Cable P/N
TxxxxxxxxNxxLAx TxxxxxxxxNxxMAx TxxxxxxxxNxxZAx TxxxxxxxxNxxZAx 404LXRxxx 406LXRxxx 412LXRxxx	Linear servo positioner with connector box, high flex	006-1889-mm

x in motor model number is place holder for any option (coil size, length, feedback, etc)
-mm denotes cable length in meters
Cable drawings available on website.
Linear servo positioned with connector box home and limit sensor cable P/N: 006-1742-01 (3.0m flying lead cable) or 006-1742-02 (7.5m flying lead cable) or 006-1742-mm. For connections, see Appendix C.



Figure 10. - *Connector Box option*

Note: For connecting T linear servo positioners (IForce or Ripped) with flying leads, and for notes on using software to configure IForce or Ripped linear motors, see Appendix B.

X5 – Drive I/O Connector

The 25-pin Drive I/O connector has seven inputs and four outputs, which are described below. All drive input and output signals are optically isolated.

- Four general purpose inputs with both Anodes (+) and Cathodes (–) available
- Three high-speed inputs with both Anodes (+) and Cathodes (–) available
- Four General Purpose outputs available

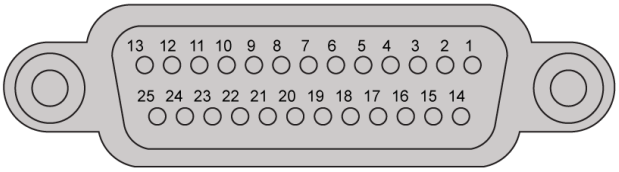

Figure 11. - *Drive I/O Connector*

Sample Wiring

Input wiring

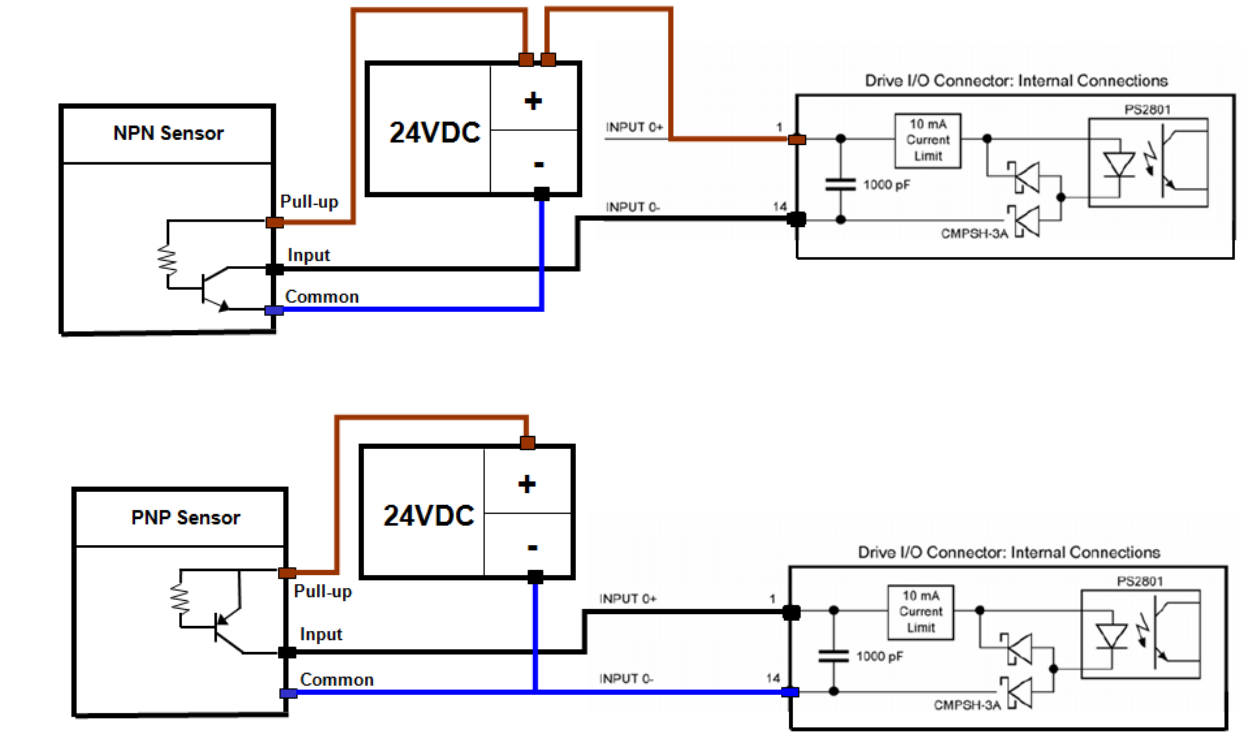

Output wiring

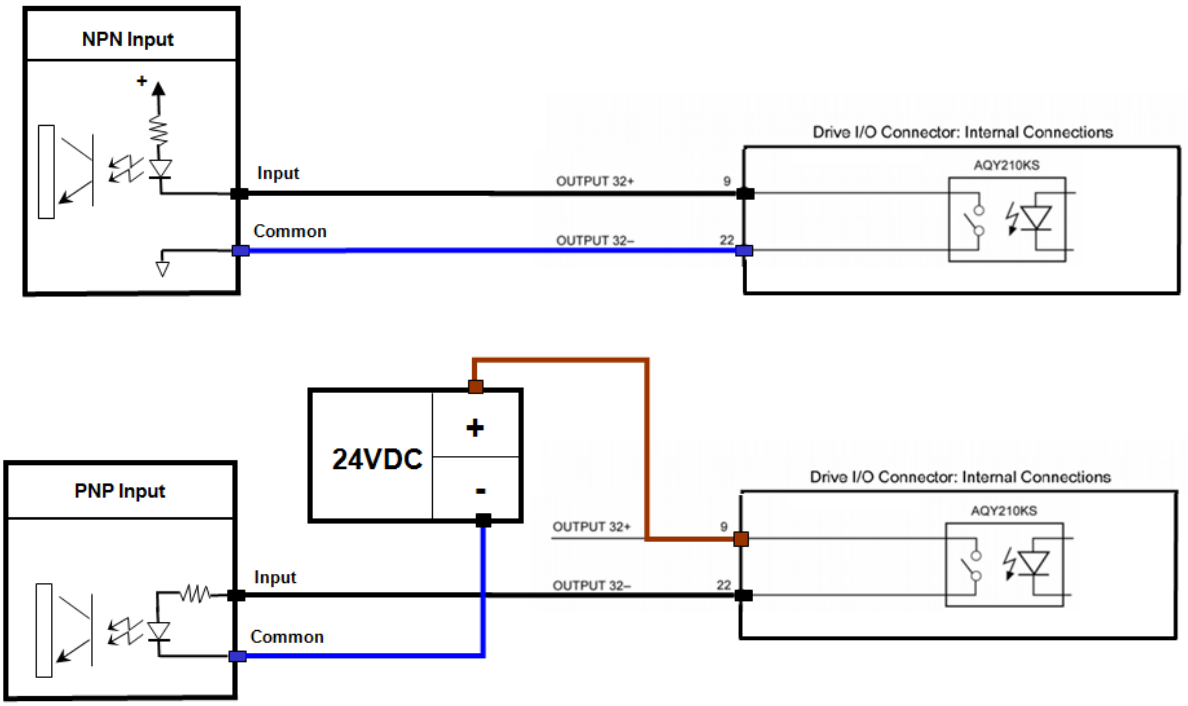

Note: VM25 Expansion Module available for easy access to IPA inputs and outputs. See "Appendix A." For wiring of Parker Mechanics limit and home sensors, see "Appendix C."

Drive I/O Cable

For preparing your own cable, use differential pair wiring with a minimum of three turns-per-inch (3 TPI).

Drive I/O Connector Specification

Description	Specification
Connector Type	25-Pin D-Subminiature (female socket)
Manufacturer	KYCON or equivalent
KYCON Part Number	K22-B25S-NR15

Drive I/O Connector Specification—Mating Connector[1]

Description	Specification
Connector Type	25-Pin D-Subminiature (male connector)
Manufacturer	AMP or equivalent
Cable Kit	AMP Part Number 748474-1 includes: • 1658648-1 connector • shield • enclosure • two jack screws • (does not include contacts or ferrules)
Contacts	Crimp style: • Gold Flash—Amp Part Number 748333-7 • 30 µ" Gold—AMP Part Number 748333-4

[1] Mating connectors are not provided with the drive.

Drive I/O Connector Pinout

Pinout configuration for the Drive I/O connector is listed in the following table. A box surrounding pins indicates a requirement for twisted pair wiring.

Drive I/O Connector Pinout

Signal	Pin
Input 0+ Input 0–	1 14
Input 1+ Input 1–	2 15
Input 2+ Input 2–	3 16
High-Speed Input 4+ High-Speed Input 4–	4 17
High-Speed Input 5+ (or Auxiliary Encoder A+) * High-Speed Input 5– (or Auxiliary Encoder A-) *	5 18
High-Speed Input 6+ (or Auxiliary Encoder B+) * High-Speed Input 6– (or Auxiliary Encoder B-) *	6 19
Input 3+ Input 3–	7 20
5 V	8
GND	21
Output 32+ Output 32–	9 22
Output 33+ Output 33–	10 23
Output 34+ Output 34–	11 24
Output 35+ Output 35–	12 25
Not used	13

* Can be used as a high-speed input or an auxiliary encoder.

Internal Connections

The following figure shows a schematic diagram of the internal connections for the Drive I/O connector.

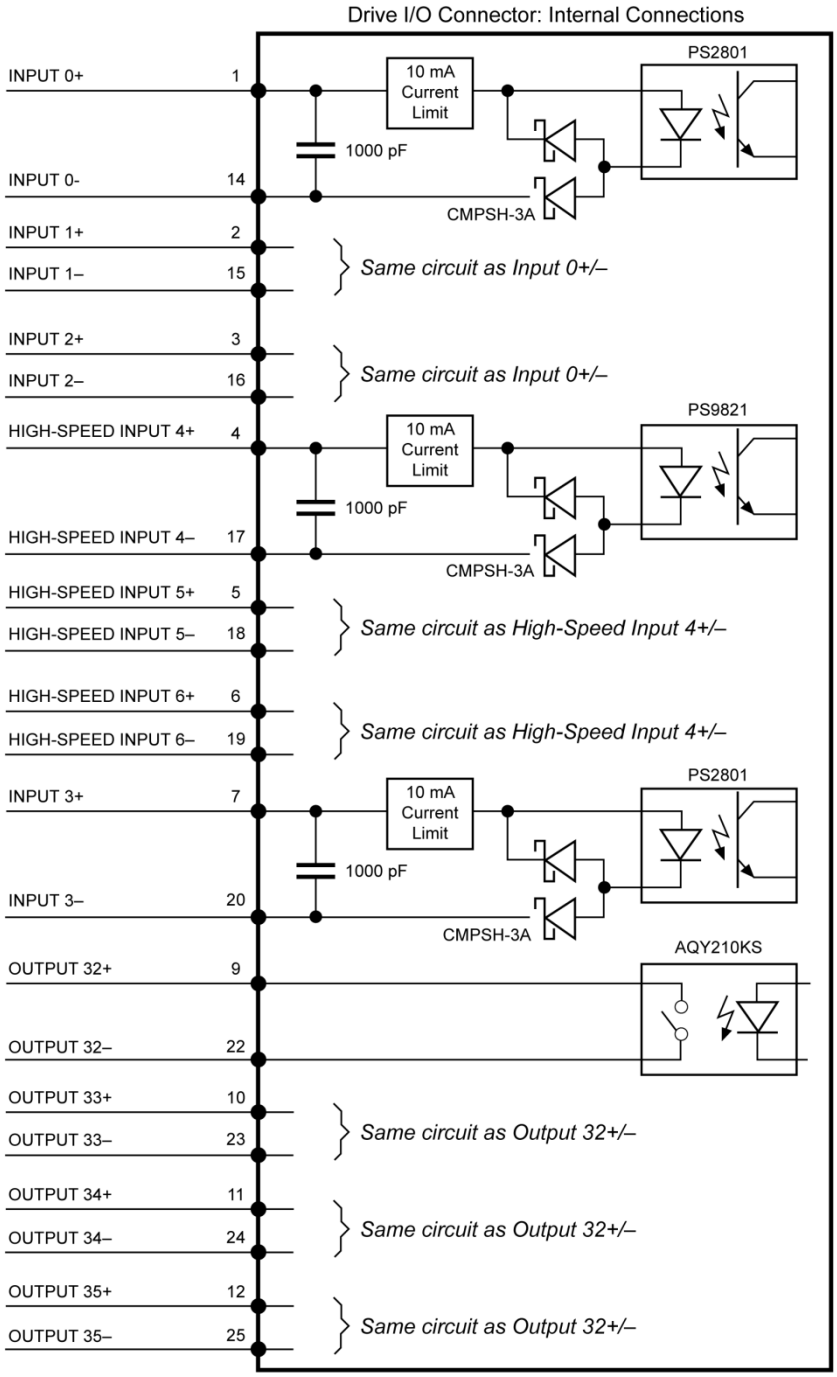

Figure 12. - *Internal Circuit Diagram for the Drive I/O Connector*

Inputs—High-Speed/Auxiliary Encoder

The high-speed inputs are optically isolated inputs. Current is limited internally for input voltage control of 5 to 24 volt logic. The Anode (+) and Cathode (−) optocoupler inputs are on separate connector pins to allow significant flexibility in wiring to different styles of interface.

Inputs —High-Speed

Description	Min	Max	Units
Turn-on time	–	200	ns
Turn-off time	–	400	ns
Guaranteed on voltage	4	–	VDC
Guaranteed off voltage	–	2	VDC
Maximum forward voltage	–	30	VDC
Maximum reverse voltage	−30	–	VDC
Forward current	3	12	mA

Note: All parameters are at the connector pin.

Here are some additional notes regarding the use of the high-speed inputs:

- Two high-speed inputs can be wired as an encoder input:
  - A+/A- are wired to high speed input 5
  - B+/B- are wired to high speed input 6
- The encoder 5V power source is available on the IO connector.
- Differential encoder signals are used.
- The controller always reads as both inputs and as an encoder.
- No software selection/command is required.
- The encoder input is mapped to controller parameter ENC1 (P6160).
- The encoder position value can be utilized for gearing, cam, etc.
- ENC1 can also be assigned as a position feedback source.

Inputs—General Purpose

These slow inputs are optically isolated. Current is limited internally for input voltage control of 5 to 24 volt logic. The Anode (+) and Cathode (−) optocoupler inputs are on separate connector pins to allow significant flexibility in wiring to different styles of interface.

Inputs —General Purpose

Description	Min	Typical	Max
Turn-on time	–	1	ms
Turn-off time	–	2	ms
Guaranteed on voltage	4	–	VDC
Guaranteed off voltage	–	2	VDC
Maximum forward voltage	–	30	VDC
Maximum reverse voltage	− 30	–	VDC
Forward current	3	12	mA

Note that all parameters are at the connector pin.

Outputs—General Purpose

The general purpose outputs are optically isolated and current limited. Both sides of the MOSFET output structure are brought to the pins to allow significant flexibility in wiring to different styles of interface.

Outputs —General Purpose

Description	Min	Typical	Max	Units
Turn-on time	–	–	2	ms
Turn-off time	–	–	1	ms
Working voltage	− 30	–	30	VDC
On-time voltage drop IL ≤ 10 mA	–	–	0.4	VDC
On-time voltage drop 10 mA < IL ≤ 100 mA	–	–	4.0	VDC
Load current, IL (TA ≤ 35C)	–	–	100	MA
Load current, IL (35C < TA ≤ 50C)	–	–	80	MA
Short circuit trip current	–	200	–	mA

Note that all parameters are at the connector pin.

X7 – Auxiliary (Control Power, Torque Enable, Analog Input)

The Auxiliary connector on the IPA allows the user access to three separate functions on the product: control power, torque enable, and two analog inputs.

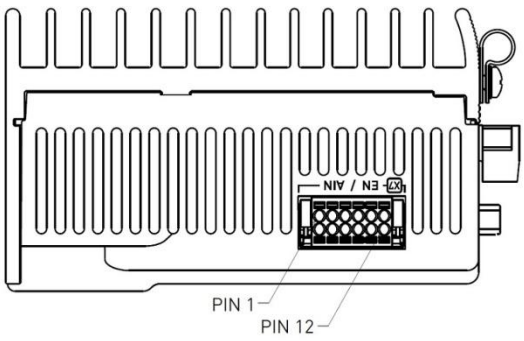

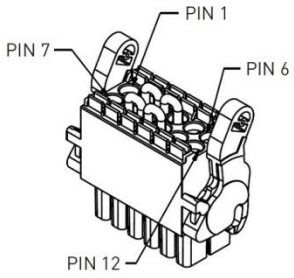

Auxiliary Connector Specification

Description	Specification
Connector Type	2x6 Pin 3.5mm male socket
Manufacturer	Phoenix (or equivalent)
Phoenix Part Number	1787056

Auxiliary Connector Specification—Mating Connector

Description	Specification
Connector Type	2x6 Pin 3.5mm female plug
Manufacturer	Phoenix or equivalent
Phoenix Part Number	1790522 (black) or 1708577 (green)

Signal	Pin	Description
CUST_24V	1	Control keep alive power
TRQ_EN1	2	Torque enable input 1
TRQ_EN2	3	Torque enable input 2
TRQ_EN_24V	4	Bypass power for TE (limited to 30mA)
ANALOG_IN0	5	Differential analog input 0 +/-10V
ANALOG_IN1	6	Differential analog input 1 +/-10V
CUST_COM	7	Common for control keep alive power
/TRQ_EN1	8	Torque enable input 1
/TRQ_EN2	9	Torque enable input 2
TRQ_EN_COM	10	Common for TRQ_EN_24V
/ANALOG_IN0	11	Differential analog input 0 +/-10V
/ANALOG_IN1	12	Differential analog input 1 +/-10V

Included on the connector is a current limited power output that can be used to bypass the Torque Enable functionality. See the Torque Enable section for more information. Jumpers (22AWG solid) are pre-installed between TRQ_EN_24V, TRQ_EN1 and TRQ_EN2 and between TRQ_EN_COM, /TRQ_EN1 and /TRQ_EN2. In order to disable torque, these jumpers must be removed. See the "Torque Enable Functional Description" section for more information on the Torque Enable feature.

Note: TRQ_EN_24V is limited to less than 30mA of current by hardware. It is meant only to bypass the Torque Enable functionality in applications that do not require its use. It is not meant to power external circuitry.

Output (Motor) Power

Output Power Ratings

Continuous and peak output power ratings for all IPA models are listed in the following table.

Output Power Ratings

Model	Continuous Peak Max		Cont. Max Peak	
	Current (RMS)	Current (RMS)	Shaft Power (Watts)	Shaft Power (Watts)
IPA04-HC	3.00	9.00	400	1200
IPA15-HC	6.30	18.90	1500	4500

Output (Motor) Power Connections

The following figure shows how to connect the motor cable to the Output Power connector.

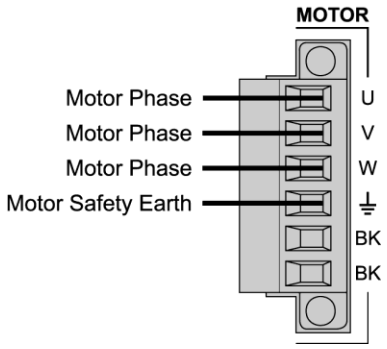

Figure 13. - *Output Power Connection*

Current Parker motor cables are marked with white numbers (1, 2, or 3) to indicate the phase. Connect Motor Phase 1 to U, 2 to V, and 3 to W, and Motor Safety Earth to the Protective Earth ground connector.



Warning: **You must connect the Motor Safety Earth conductor terminal, marked with the earth symbol ⏚, to the motor cable's motor-safety-earth wire green/yellow).**

The following table contains wiring information for making connections with various Parker Hannifin motors.

Wiring to Parker Motors

Phase	Hi-Flex/ PS/Gemini	Legacy Parker Hannifin
U	1	Red/Yellow
V	2	White/Yellow
W	3	Black/Yellow
⏚	Green/Yellow	Green/Yellow

Power Supply

IMPORTANT: Power to the IPA can be supplied in multiple ways. Completely read this section and comply with all safety measures before proceeding with connecting the unit to power.

Input Power

The mains Motor Power supply and the optional Control Power supply for the drive/controller must meet the requirements listed in the following table.

Input Power Requirement

Input Power	Requirements
Motor Input Power (L1, L2)	120/240 VAC, 50/60 Hz, single phase
Control Input Power (C1, C2)	120/240 VAC, single phase

Fuse Requirements

IPAs have no user-serviceable internal fuses. For safety, the user must provide a fuse in each of the mains input lines.

Motor Power Fuse Information

Select the proper Motor Power input fuse for your specific application using the following table.

Motor Power Fuse Information

Drive	AC Voltage	Fuse Style	Rating	Fuse Type
IPA04	120 VAC	125 VAC Time Delay	20A	RK5 or better
	240 VAC	250 VAC Time Delay	20A	RK5 or better
IPA15	120 VAC	125 VAC Time Delay	30A	RK5 or better
	240 VAC	250 VAC Time Delay	30A	RK5 or better

The following table lists part numbers (at time of publication) for suitable fuses from several manufacturers. These fuses are type RK5 (time delay fuses).

Fuse Part Numbers

Amps	Bussmann	Ferraz Shawmut (formerly Gould)	Littelfuse
10	FRN-R-10	TR10R	FLNR10
20	FRN-R-20	TR20R	FLNR20
30	FRN-R-30	TR30R	FLNR30
40	FRN-R-40	TR40R	FLNR40

Control Power Fuse Information

Each Control Power input line must be protected by the following fuse:

Control Power Fuse Specification

Description	Specification
Fuse Rating	1 Amp
Fuse Type	Class CC (Bussmann KTK-R-1 or equivalent UL listed fuse)
Input Voltage Range	120/240 VAC, 50/60 Hz
Input Current	0.2 Amps RMS
Control Power Functions	Communications Diagnostics Motor position feedback Brake relay in brake

Drive Inrush Current

The drive inrush current is limited by an internal thermistor that changes value with the ambient temperature. Drive inrush current is therefore dependent upon the temperature of the surrounding environment (T_{amb}). To determine the drive inrush current for your drive, see the following table.

Drive Motor Power Inrush Current

Model	AC Voltage	Drive Inrush at T_{amb}=25C	Drive Inrush at T_{amb}=50C
IPA04	120 VAC 240 VAC	8.50 18	17.00 36
IPA15	120 VAC 240 VAC	8.50 18	17.00 36

Power Supply Connections

Power to the IPA may be supplied in one of two ways: a single source to the Motor Input Power (Mains) screw terminals with the factory installed jumpers in place; or removal of the jumpers and application of separate sources to the Motor Power terminals and to the Control Power terminals.

When a separate mains power is applied to the drive/controller, the internal control board remains powered when the primary Motor Power source is disconnected. When operated in this configuration, the Control Power input performs a “keep-alive” function. The keep-alive circuit maintains several important functions, including the following:

- Communications
- Diagnostics
- Motor position feedback
- Brake relay in brake mode
- Drive I/O signals

Earth Ground

Under normal operation, no current should flow through the Protective Earth connection.

IMPORTANT: Make the Protective Earth ground connection directly by means of a low-impedance path less than or equal to 0.1 ohm (with no fuses or other devices).

Single-Source (Motor Input Power) Connections

The following figure shows how to connect the external 120/240 VAC Motor Power single-source to the Input Power connector.

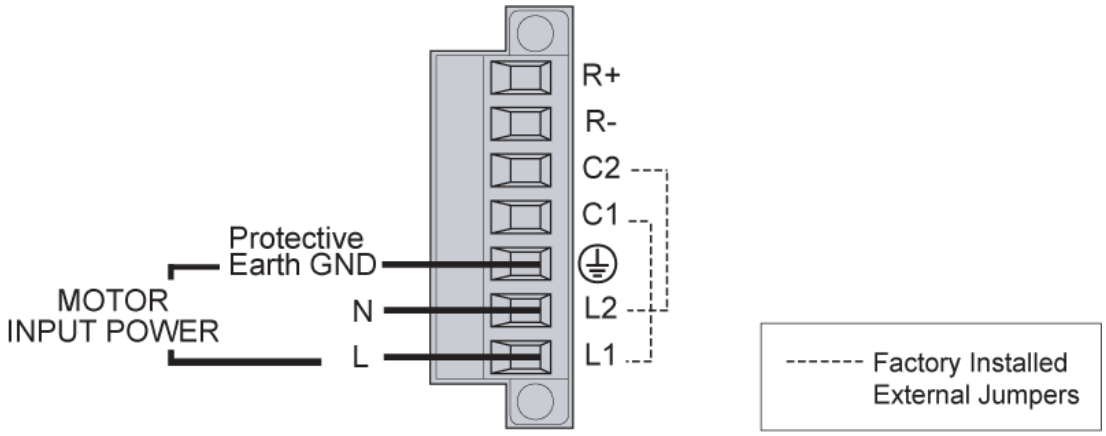

Figure 14. - *Motor and Control Power Supply Connection, Single Source*

Single input (with factory-installed jumpers)	Connections
Connect *Motor Input Power* only.	L1, L2, Gnd

Separate Sources Connections

Figure 15 shows how to connect separate external Motor and Control Power sources to the terminal connector installed in the drive.

IMPORTANT: You must remove the factory installed jumper wires to use separate power sources. For more information on the jumpers, see "Factory Installed Jumpers" on page 30.

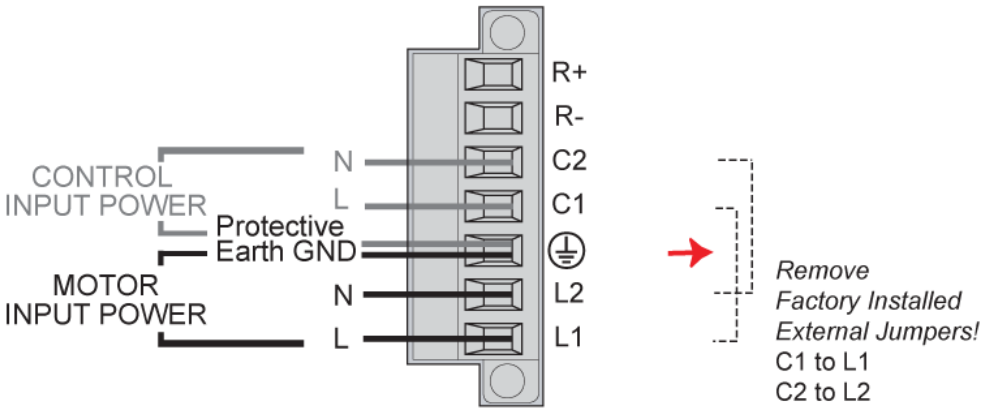

Figure 15. - *Motor and Control Power Supply Connection, Separate Sources*

Multiple inputs (remove jumpers)	Connections
Connect *Motor Input Power*	L1, L2, Gnd
- and -	
Connect *Control Input Power*	C1, C2, Gnd

Warning: You must connect the drive's protective conductor terminal, marked with the earth symbol ⏚, to a reliable system Protective Earth.

Warning: The drive's connector strip terminals have hazardous voltages when power is applied to the drive, and *up to several minutes after power is removed*. Lower voltages may still be present for several minutes after power is removed. During normal operation, these high voltage terminals must not be accessible to the user.

Multiple Drive/Controller Installations

In a typical cabinet installation, a single mains line connects to a terminal bus inside the cabinet. From the terminal bus, make individual connections for Mains and Control Power to the corresponding connector(s) on each drive/controller. Be sure to install fuses for each drive between the terminal bus and the drive.

Tie each drive's Protective Earth ⏚ conductor terminal directly to the system safety earth location as shown in Figure 16. Under normal operation, no current should flow through the Protective Earth ground.

Safety Earth Connection

For multiple drive installations, Parker Hannifin recommends a single point or "star" safety earth configuration. The following figure represents a typical star safety earth connection.

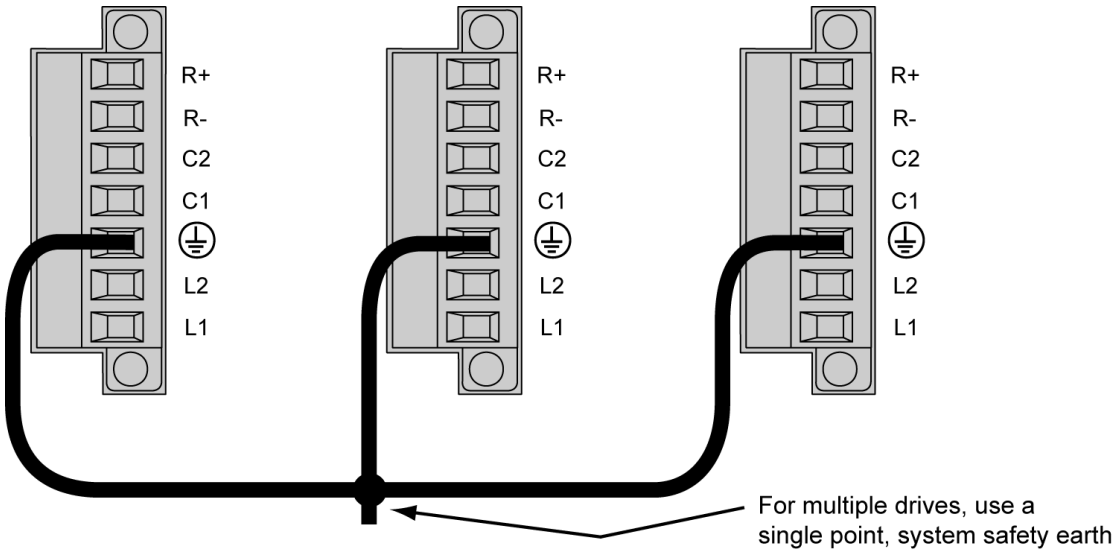

Figure 16. - *Multiple Drives Safety Earth Connection*

Brake Relay (Optional)

The Brake Relay connection (on the Output Power connector) provides a safety feature for your motion control system, particularly for vertical applications. The drive/controller acts as a control switch for the motor brake (if a brake is present). When 24V is applied from an outside power supply through the drive's Brake Relay (BK) terminals, the motor brake is disabled. When the power supply is interrupted, or the drive/controller faults or is disabled, the brake is enabled and stops shaft rotation.

Brake Relay Connector (on Output Power Connector)

Description	Connections
Models	IPA04, IPA15
Connector Type	Removable screw terminal
Terminals	6
Pitch	0.200 in (5.08 mm)
Wire range	12-26 AWG 14-27 SWG (0.12-3.30 mm2)
Wire strip length	0.310 in (8 mm)
Torque	7.0 in–lbs nom. (0.79 N-m)

Brake Relay Operation

Brake Relay Operation

Drive Condition	Relay State
Enabled Faulted	Closed (conducting) Open
No AC power on L1 and L2* or drive not enabled	Open
* Mains Control power on C1 and C2 does not affect the relay. With mains power applied to C1 and C2, the relay remains open if AC power is not applied to the L1 and L2 terminals.	

Brake Relay Specifications

Description	Specification
Relay Type	Solid State Relay Normally open
Relay Maximum Rating	1 Amp at 24 VDC



Warning: **Do not exceed the ratings of the brake relay. If required, control a suitable external relay with this relay to meet your power requirements.**

Brake Relay Connection

On all models, the two BK terminals are optically isolated from the drive/controller's internal logic.

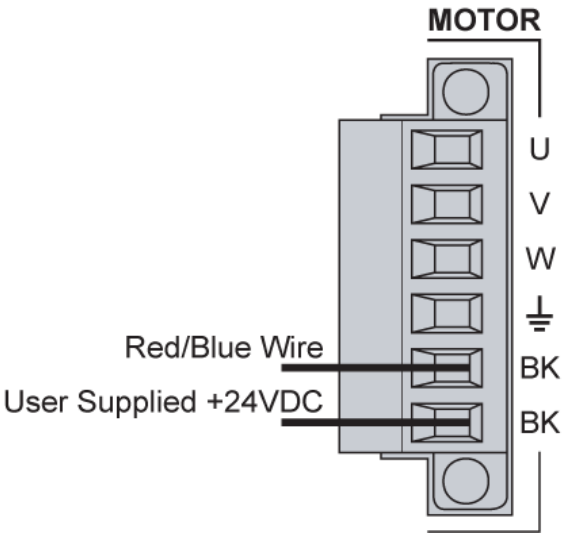

Figure 17. - *Typical Brake Relay Connection on the Output Power Connector*



Warning: **You must connect the drive's protective conductor terminal, marked with the earth symbol ⏚, to a reliable system Protective Earth.**



Warning: **The drive's connector strip terminals have hazardous voltages when power is applied to the drive, and *up to several minutes after power is removed*. Lower voltages may still be present for several minutes after power is removed. During normal operation, these high voltage terminals must not be accessible to the user.**

Brake Relay to Motors with Full Wave Rectifiers

Newer Parker brake motors contain full wave rectifiers, so connection polarity is not an issue during installation.

Older motors (BE, SM, NeoMetric, and J series motors, serial numbers less than 010904xxxxx) do not have rectifiers. SMN motors less than 050801xxxxx do not have rectifiers. MPM motors do not have rectifiers.

Brake Relay does not supply 24VDC. Use an external source. Recommend that this supply is separate from supply for logic to prevent noise on digital I/O.

1 Connect one red/blue brake wire (Parker Motor cable or equivalent) to one BK terminal.

2 Connect the second red/blue brake wire (Parker Motor cable or equivalent) to the 24V return on the power supply.

3 Connect the +24 VDC power supply to the second BK terminal.

The following figure shows a typical application.

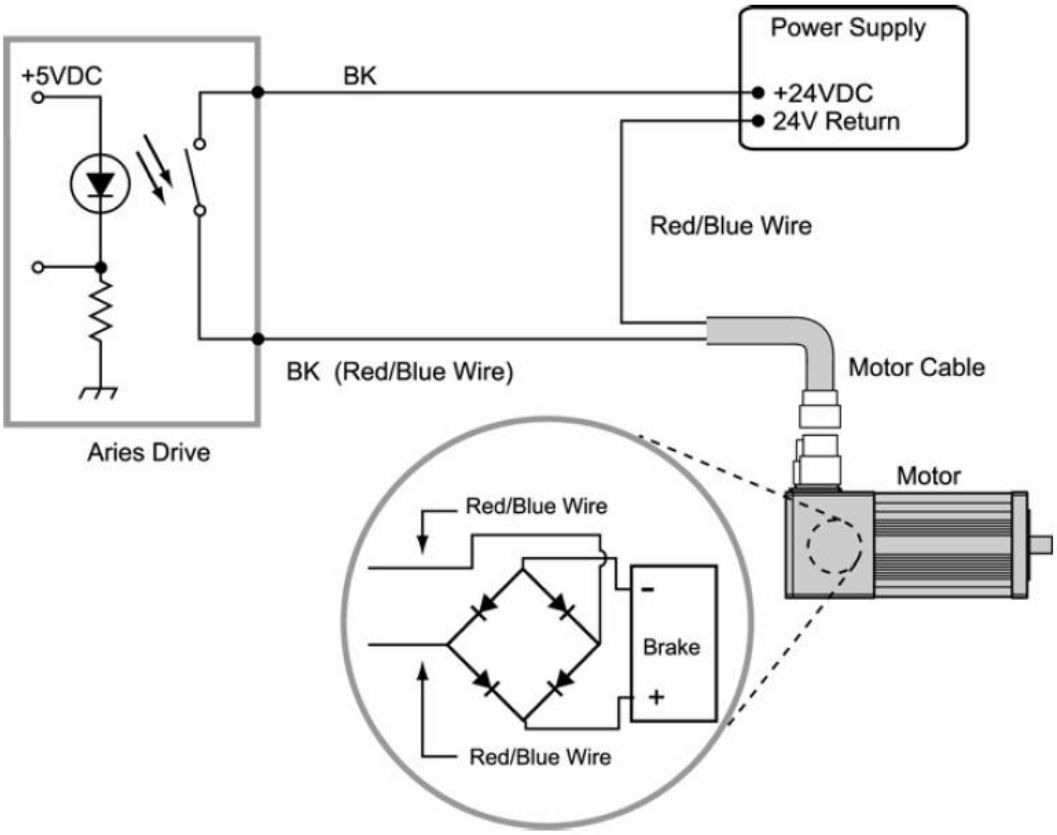

Figure 18. - *Brake Relay Connection for Motor with Full Wave Rectifiers*

Brake Relay to Motors without Full Wave Rectifiers

When using Parker MaxPlus motors, Parker motors with serial numbers less than 010904xxxxx, or non-Parker motors, you must install a fly-back diode. Consult the specifications or the manufacturer of your motor.

1. Connect one red/blue brake wire (Parker Motor cable or equivalent) to one BK terminal (located on the Motor connector.
2. Connect the second red/blue brake wire (Parker Motor cable or equivalent) to the 24V return on your power supply.
3. Between the two red/blue wires, connect the fly-back diode.
4. Connect the +24 VDC power supply to the second BK terminal.

The following figure shows a typical installation.

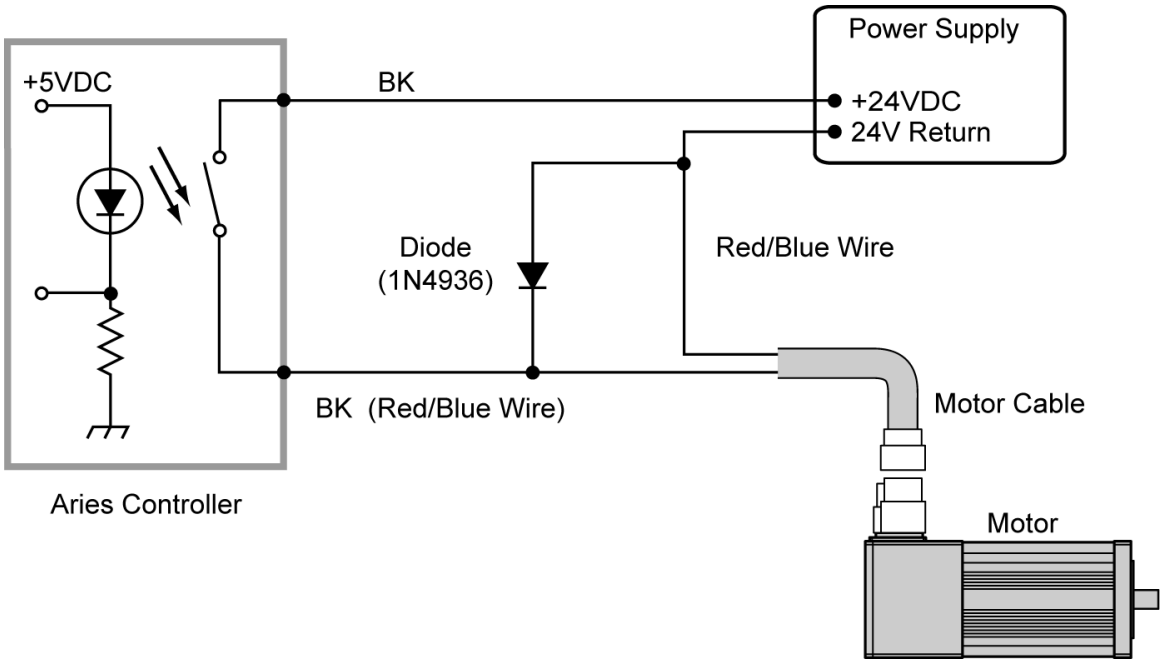

Figure 19. - *Brake Relay Connection for Motor without Full Wave Rectifiers*

Regeneration Protection

IPA04 and IPA15 do not have internal regeneration resistors for power dissipation; however, an external regeneration resistor can be used for this purpose.

Regeneration Connection

To use an external regeneration resistor, connect your external resistor to the R+ and R- terminals located on the Control Power connector.

The following figure illustrates the external regeneration resistor connections.

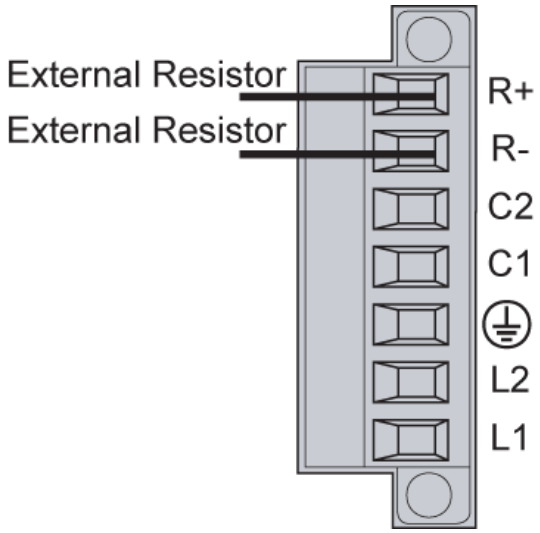

Figure 20. - *External Regeneration Connection*

	**Warning:**	**The drive/controller's connector strip terminals are at hazardous voltages when power is applied, and up to several minutes after power is removed. Lower voltages may still be present for several minutes after power is removed. During normal operation, these high voltage terminals must not be accessible to the use.**

Internal Regeneration Capability

The drive/controller may experience an over-voltage fault if the regeneration exceeds the absorbent capacity of the drive/controller's internal bus capacitors, as shown in the following table.

The available absorption varies, based on mains voltage and the drive/controller's internal capacitance. The various drives can absorb the following amounts of regenerated energy in its internal capacitors.

Regeneration Absorption

Model	Absorbs (Joules) 120 VAC	Absorbs (Joules) 240 VAC
IPA04	110	37
IPA15	184	62

CHAPTER 4
Communications

Overview

The IPA communicates in a standard Ethernet network, thereby providing a direct link for sending commands through the ACR-View online help system installed on a PC. This chapter describes how to establish the standard Ethernet connection.

All models of the drive/controller have a dual-stack, standard RJ-45 connector, which provides two communications ports.

Ethernet Specifications

Ethernet Cable Specification

Use a braid over foil twisted pair cable (straight or crossover) for connection to a PC. An example of this type of cable is L-COM TRD855SIG-XX. The maximum recommended cable length is 30m.

Ethernet Connector

A standard RJ-45 socket connector, located on the front panel of the drive/controller, provides two communication ports that accommodate ETHERNET connections. The two sockets of the connector are identical and either may be used for direct connection to a PC network card.

To provide top noise performance, the connector contains isolation transformers and common mode chokes for both the transmit and receive signal pairs.

Connector Specifications

Description	Specification
Manufacturer	Abracom
Connector Type	8-Pin, RJ-45 (female socket)
Abracom Part Number	ARJ11D-MBSK-A-B-IMU2

Ethernet Connector Pinout

The following table contains the Ethernet connector pinout.

RJ-45 Connector Pinout

Signal	Pin	Wire Color	Description
RX+	1	White with orange	Differential Receive positive side
RX-	2	Orange	Differential Receive negative side
TX+	3	White with green	Differential Transmit positive side
	4	Blue	Not used
	5	White with blue	Not used
TX-	6	Green	Differential Transmit negative side
	7	White with brown	Not used
	8	Brown	Not used
Note: Pin assignment follows EIA/TIA T568B guidelines.			

RJ-45 LED Ethernet Status Indicators

LEDs located on the RJ-45 socket connector indicate Ethernet status. The next table describes the LED states and their meanings.

RJ-45 Ethernet Status LED Indications

Signal	Steady	Flash	Description
Ethernet Link/Activity	Off	—	No Ethernet link detected
	Yellow	—	Ethernet link established, no activity
	—	Yellow	Ethernet link established and active
Ethernet Speed	Off	—	Ethernet 10Mbps
	Green	—	Ethernet 100Mbps

Assigning IP Addresses

Communication between the IPA and your PC must be set up before connecting over the Ethernet network. Do this by first setting the IP address of the IPA, and then setting the IP address and subnet mask for the PC.

Setting the IP Address— IPA

The factory assigns the following to each IPA:

IP Address	Subnet Mask (fixed)
192.168.100.01	255.255.255.0

Before adding the IPA to the network, complete its IP address by setting the last octet (digits) of the IP address on the rotary decimal switches. The last octet can be any number from 01 through 99 (00 is not valid).

One rotary switch is marked S1 and the other S10. S1 is the "ones" position and S10 is the "tens" position. For example, to set the address to 14, turn the pointer of the S10 switch to 1, and the S1 switch to 4 (10 + 4 = 14). See Figure 21. This IP address is now set to 192.168.100.14.

To set the address to a subnet other than 192.168.100.xx, see "Changing IP Address" on page 61.



Figure 21. - *IP Address Switches (Set to 01)*

Setting the IP Address and Subnet Mask—PC

Now set the IP address and Subnet mask for your PC. (These instructions are for Windows 7 users. If you have another Windows version, the steps may vary. Please consult your Network Administrator.)

1 Open the Control Panel on your PC by clicking **START** and clicking **Control Panel**.

2 Click **Network** and **Internet**. Your screen should look similar to this:

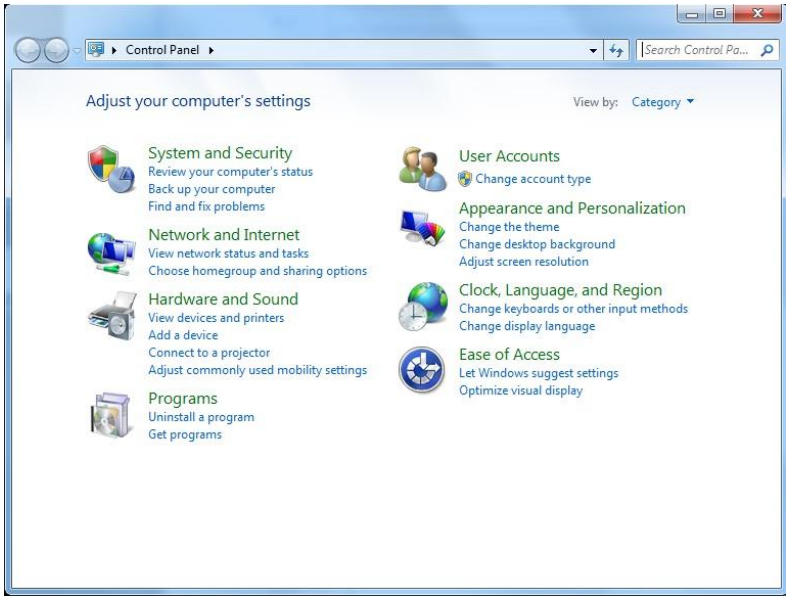

Figure 22. - *Control Panel Screen*

3 Click **Network and Sharing Center**.

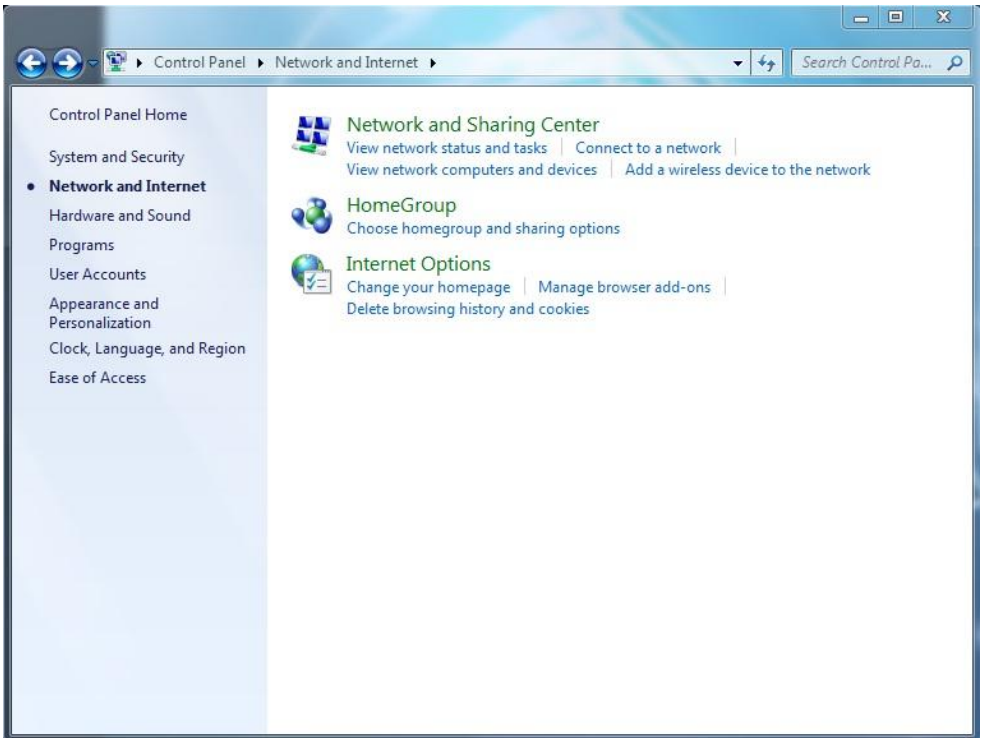

Figure 23. - *Network and Internet Screen*

4 Click **Local Area Connection**.

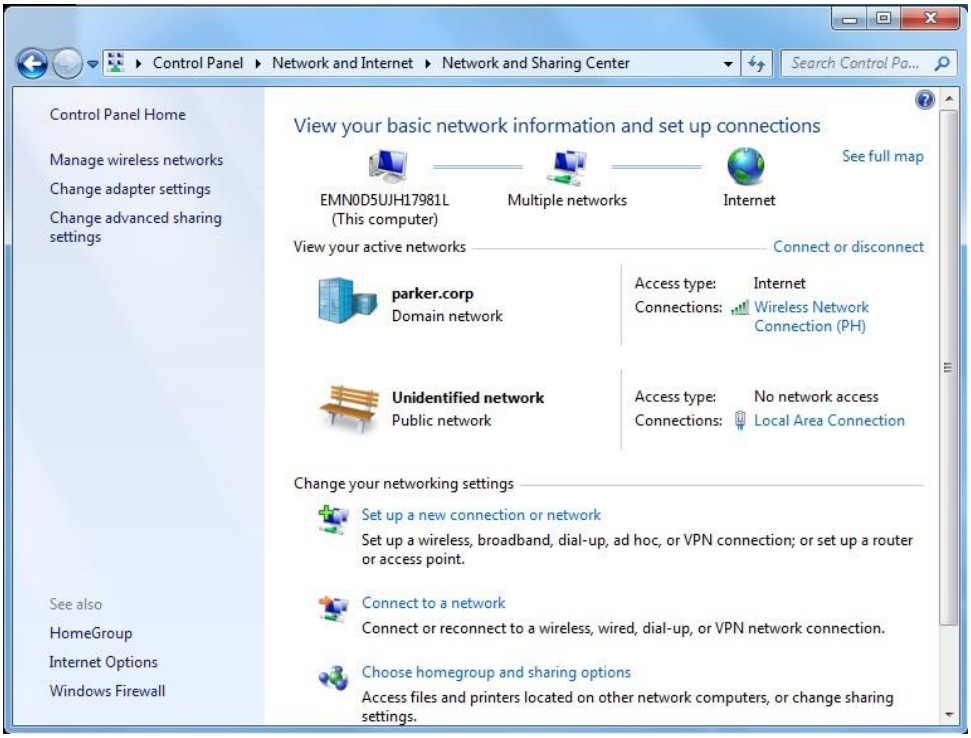

Figure 24. - *Network and Sharing Center Screen*

5 Click **Properties**.

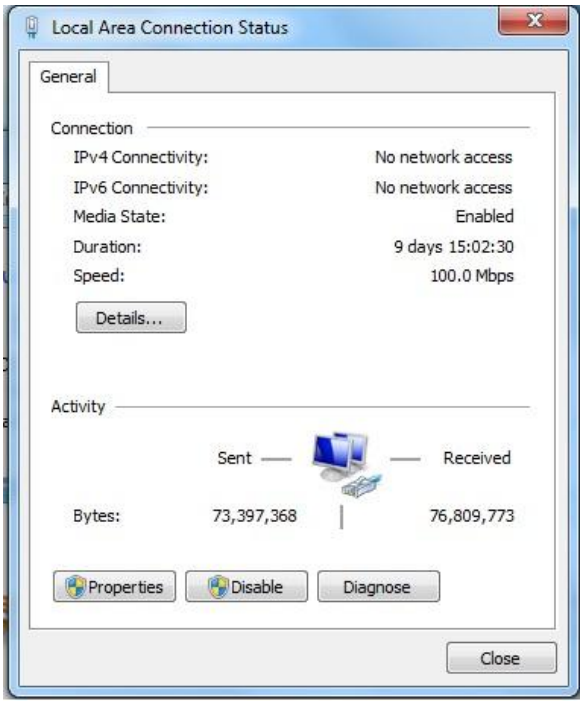

Figure 25. - *Local Area Connection Status Screen*

6 Select **Internet Protocol Version 4 (TCP/IPv4)** and click **Properties**.

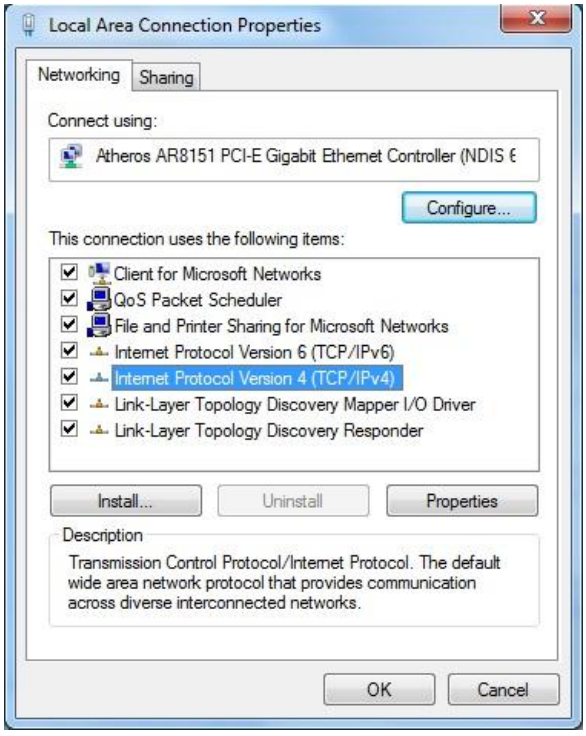

Figure 26. - *Local Area Connection Properties Screen*

7 Click the radio button next to **Use the following IP address** and type in an IP address with the same first three octets as the default IPA IP address (192.168.100). Set the last octet to a number different from the number you set with the Address Switches on the faceplate of the IPA. (See the section "Setting the IP Address— IPA") Making the last octet different gives the IPA and your PC different IP addresses in the Ethernet network. The valid range is 1 to 254. Using 000 or 255 is not valid. In the example in the next step, the IP address is set to 192.168.100.25.

8 Set the Subnet mask value to 255.255.255.0. Your window should look similar to the following:

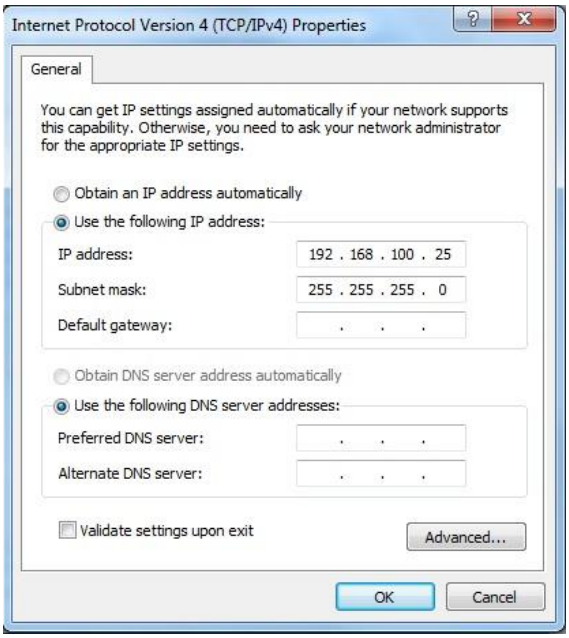

Figure 27. - *Internet Protocol Properties Screen Completed*

9 Click **OK**. It is now safe to close these windows.

IMPORTANT: It is good practice to isolate the IPA and related devices on their own subnet so that their performance is not affected by high volume network traffic.

Connecting to a PC

After assigning the IP address for the IPA, and the Subnet mask and a different IP address for your PC, connect one end of an Ethernet cable to the PC. Connect the other end to one of the IPAs two RJ-45 socket connectors. The two RJ-45 sockets can be used interchangeably.

Verifying the IP Address

The following verifies the Ethernet is set up correctly.

1 In ACR-View, under IPA and Communications, click **Ethernet**. Then enter the IP address in the box to the right.

2 In the dialog box, click **Connect**.

3 In the Terminal Emulator, type VER. If the Ethernet is set up correctly, the terminal emulator reports the firmware version information for the IPA.

See "Communications" on page 65 for help troubleshooting Ethernet problems.

Changing the IP Address

The IP address for IPA Controllers can be assigned via hardware, programmed by the user or assigned dynamically from a DHCP server.

	Switch Setting	Unit IP Address
Hardware	0 (S1=0, S10=0)	10.10.10.10
Hardware	1 (S1=1, S10=0)	192.168.100.1 (default)
Hardware	2-98 (S1=2, S10=0) Example: 14 (S1=4, S10=1)	192.168.100.(S10)(S1)
Software	99 (S1=9, S10=9)	User defined via IP command
Software	99 (S1=9, S10=9)	User defined via IP command Set IP "0.0.0.0" or Set IP "255.255.255.255" to have the controller accept address from a DHCP server

Hardware Assignment: Change the switches to desired address in the range shown above then cycle power or issue REBOOT command for the new address to take effect.

Software Assignment: Establish communication to the controller using a hardware assigned address. Change the hardware setting to 99 (S1=9, S10=9) but do not cycle power yet. In the terminal emulator assign a new address using the syntax IP "xxx.xxx.xxx.xxx". Setting is saved automatically in non-volatile RAM. Change subnet mask as needed using syntax IP MASK "xxx.xxx.xxx.xxx". Cycle power or issue REBOOT command for the new address to take effect. For example:

SYS> IP "192.168.20.45"

SYS> IP MASK "255.255.255.0"

SYS>REBOOT

LED Status Indicators

Ethernet Network Status

The drive has one bi-color LED on the left of the front panel that indicates Ethernet status. It displays green or yellow colors. The following figure shows the location of the LED on the unit.

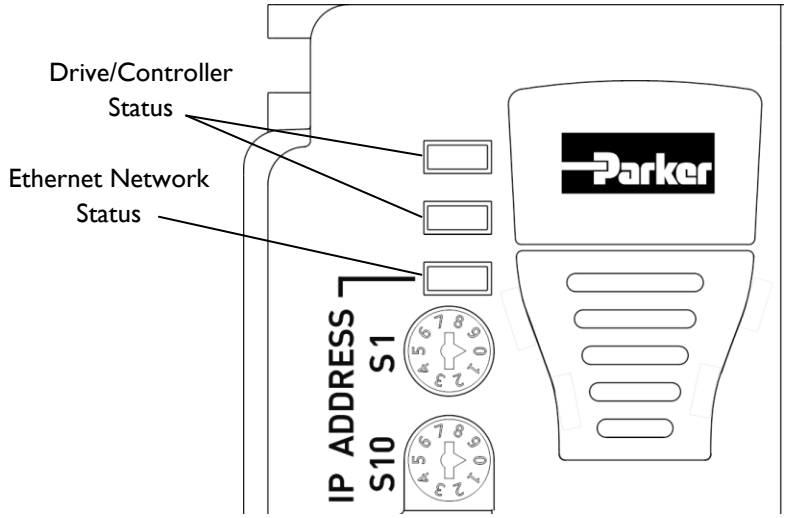

Figure 28. - *Ethernet Network Status LED*

The following table describes the states and meanings of the Ethernet Network LED. (For additional information on verifying communication, see "Chapter 5 Troubleshooting.")

Ethernet Network Status Indicator LED Descriptions

LED State	Description
Off	Powering up; no connection
Green	TCP connection active
Red	UDP connection active
Red/Green (alternating)	UDP and TCP connection active

CHAPTER 5
Troubleshooting

General Troubleshooting Guidelines

The IPA design features easy connectivity, auto-detect functions, and reliability. In addition, LEDs on the front panel of the unit provide quick identification of AC power, drive, and Ethernet status. If, after following the installation guidelines in Chapter 2, 3, and 4, your drive/controller does not function properly, use the guidelines and procedures in this chapter to troubleshoot. These guidelines also apply to troubleshooting a malfunction during normal operation of the drive.

A problem with the drive typically can be traced to one of four areas: power, power-up sequence, communications, and motor control. If your system is not functioning properly, follow the steps indicated for each of these areas.

Power

The following figure shows where to check the status LEDs.

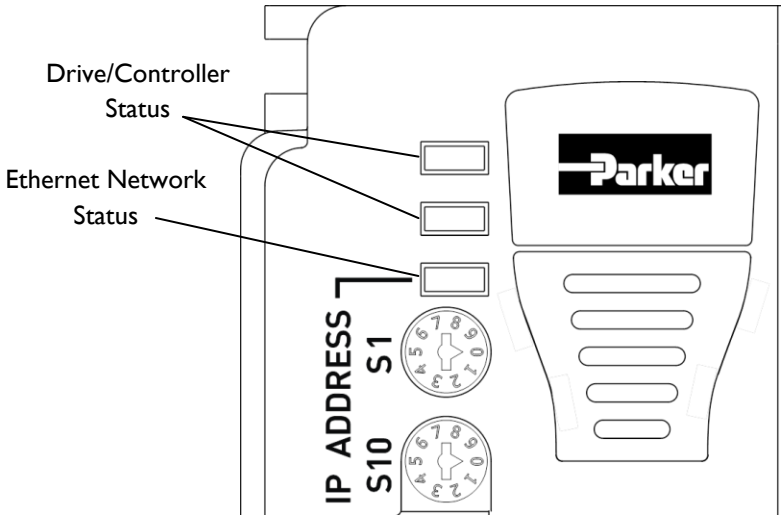

Figure 29. - *Ethernet Network and Drive/Controller Status LEDs*

If neither the Ethernet Network Status LED nor the Drive/Controller Status LEDs are illuminated, do the following:

1. Look for problems with AC power. Check the AC power source(s). Also check Input Power / Mains connections (L1, L2, and ⏚ earth ground terminals for Motor Input Power, and C1, C2, and ⏚ earth ground terminals for Control Input Power).
2. If using the 24V keep alive on the Auxiliary connector, check the input power and rated current of the supply.
3. If the AC wiring is correct but no LEDs illuminate, remove all connections to the unit (Ethernet cables, Drive I/O, Motor Feedback, Motor Input Power, and Output Power), leaving the Control Input Power C1, C2, and ⏚ earth ground terminals connected. Apply power to the drive. If any LEDs illuminate, there is a short in one of the disconnected cables.

Communications

All drive/controller communications are based on Ethernet. The IPA may be connected directly to any appropriately configured Ethernet port. The drive IP address will be 192.168.100.xx, where xx is defined by the address selection switches on the unit's front panel.

RJ-45 Ethernet Status LEDs

The first step in troubleshooting communications is to observe the state of the RJ-45 Ethernet Status LEDs. (Figure 30 shows their location on the drive's dual-stack RJ-45 socket.) These LEDs indicate any Ethernet connection, as described in the next table. Note that for a standard 100Mbps connection, both the yellow and green LED should be illuminated. For a 10Mbps Ethernet connection, the Yellow LED should be illuminated and the Green LED off.

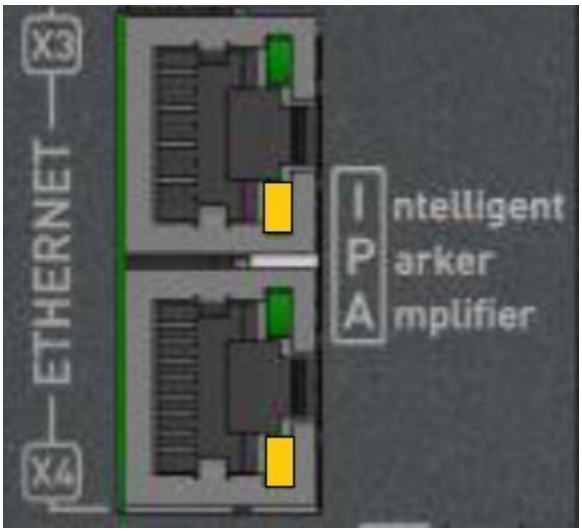

Figure 30. - *RJ-45 Ethernet Status LEDs*

Ethernet Status LED Descriptions

LED	Steady	Flash	Description
Ethernet Link/Activity	Off	—	No Ethernet link detected
	Yellow	—	Ethernet link established, no activity
	—	Yellow	Ethernet link established and active
Ethernet Speed	Off		Ethernet 10Mbps
	Green		Ethernet 100Mbps

If neither RJ-45 Ethernet Status LED is illuminated, the physical Ethernet connection is faulty.

1 Verify that you are using the correct type of cable. See "Ethernet Cable Specification" on page 55.

2 Verify that the cable pinout matches the drive's connector pin out. See "Ethernet Connector" on page 55.

3 Try swapping cables with Ethernet cables you know to be good. Even cables that do not meet the Ethernet cable specification should cause the LEDs to illuminate.

4 If the LEDs still do not illuminate, look for Ethernet hardware problems.

Ethernet Network Status LED

If the Ethernet Network Status LED is off, there is no valid Ethernet communication.

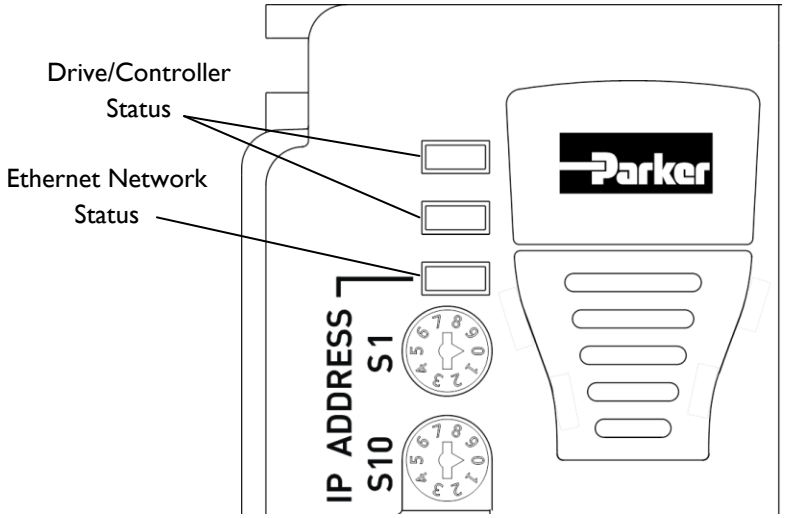

Figure 31. - *Ethernet Network Status LED*

Ethernet Network Status Indicator LED Descriptions

Ethernet Status LED Illumination States	
LED State	**Description**
Off	Powering up; no connection
Green	TCP connection
Red	UDP connection
Red/Green (alternating)	UDP and TCP connection active

1 Verify that no two drive/controllers on the network have the same IP address. The IP address is determined by the Address Switch settings on the front panel of the unit.

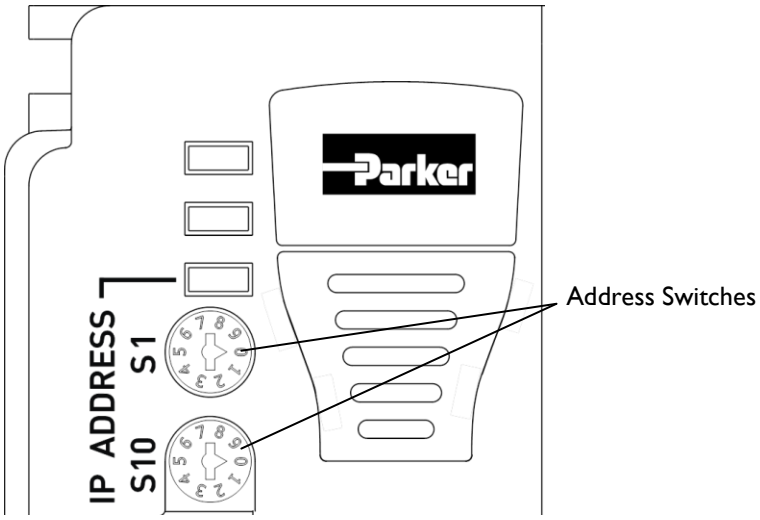

2 Using a standard Ethernet connection, test the IP assignment. At a DOS or command prompt, type "ping 192.168.100.xx", where xx is the setting of the IPA address switches on the front panel.

   a. If you receive a "reply from" message, do the following: disconnect the Ethernet cable and type the ping command again.

      i. If you see "reply from" message, then another device or computer has already been assigned the same IP address. Change the IP address of the IPA to one that is unique in the network and cycle power.

      ii. If you see a "timeout" message, then the unit is properly configured and is network accessible. Re-attach the Ethernet cable.

   b. If a "timeout" message is seen, the IPA has an invalid IP address. Change the address switches to the correct address and cycle power.

ACR-View

The ACR-View software is a user-friendly interface for verifying status of and commanding the IPA. Use ACR-View to perform additional troubleshooting of your network and drive/controller.

Once you have established an Ethernet connection as indicated by the Ethernet Network Status LED, launch ACR-View on the computer system connected to your drive/controller.

1 Open the Configuration Wizard.

2 Set the drive motor combination used. If you are not using a standard Parker motor, then check the box next to "I want to edit the mechanical/electrical parameters for my motor (Advanced)."

3 Click **Next** and verify that the motor parameters are correct.

4 Continue through the configuration wizard and verify that all the parameters for the axis are correct.

Motor Control

The first step in troubleshooting motor-control issues is to examine the Drive/Controller Status LEDs (Figure 32). Use the following table to determine the indicated condition. Use the additional information in this section to take corrective action. On power-up, the LED pattern will flash through the various boot stages before settling into one of the patterns listed below.

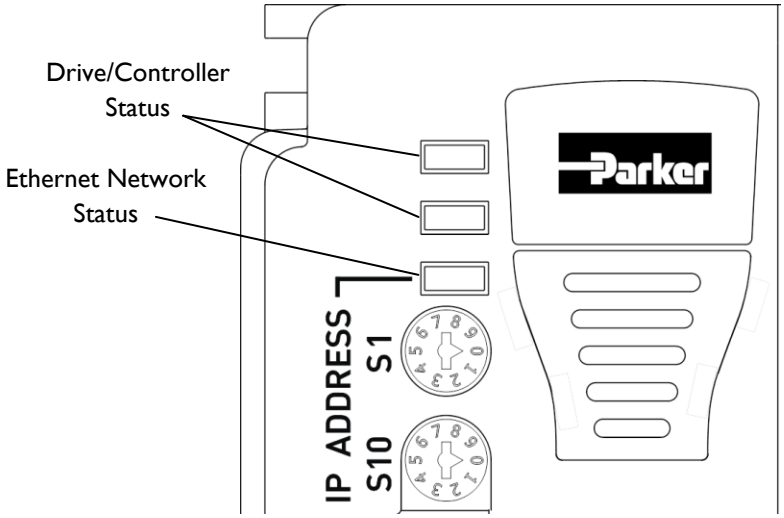

Figure 32. - *Drive/Controller Status LEDs*

Drive Status Indicator LED Descriptions

Controller Status LED Illumination States		
LED Middle	**LED Top**	**Description**
Drive/Controller Enabled		
Off	Green	Enabled
Yellow (flashes during Regeneration)	Green	Enabled, Regeneration active
Yellow/Green (alternating)	Green	Enabled, Autorun mode
Drive/Controller Disabled		
Off	Red	Disabled, no faults
Yellow	Red	Disabled, no bridge power
Yellow & 1 Green (flashing)	Red	Disabled, Bridge fault
Yellow & 2 Green (flashing)	Red	Disabled, Feedback fault (Hall error or Encoder loss)
Yellow & 3 Green (flashing)	Red	Disabled, Thermal fault
Yellow & 4 Green (flashing)	Red	Disabled, other fault (Undervoltage, Overvoltage, Motor Configuration error, Motor Regeneration fault, or Network Loss fault)
Yellow & 5 Green (flashing)	Red	Disabled, Drive Parameter fault
Green	Red	Hardware watchdog fault *Ethernet LED will also be Red
N/A	Orange	Flash is being modified.



Warning: **When the top LED is Orange, the IPA is modifying the contents of flash. If power is cycled on the unit at this time, flash may be corrupted and the unit may need to be reprogrammed.**

Fault Correction

To access further information on the drive status and fault conditions, use ACR-View on the computer system connected to your Ethernet network.

1 Open the terminal emulator in ACR-View.

2 Enter the **DRCONFIG** command to see a list of drive configuration editors.

3 Enter the **DRERROR** command to see a list of drive error messages.

Pay close attention to faults that must be fixed. Refer to the following section for corrective action suggestions.

Error Codes

The following table contains a list of error messages and a brief description of corrective action.

Error Code Messages

Error	Resolution
E0 Motor Configuration Warning	The motor rating is too high for the drive/controller, and the drive/controller is using its own limits for safety reasons.
E1 Motor Configuration Error	One of the motor parameters is set to zero (0). Look at the additional errors to find which parameters are set at zero (0). Refer to your motor specifications for the correct value.
E3 Max Inductance = 0	This parameter is set to zero (0). To correct the error, you must set a non-zero value. Refer to your motor specifications for the correct value. (C4 Motor Inductance)
E4 Rated Speed = 0	This parameter is set to zero (0). To correct the error, you must set a non-zero value. Refer to your motor specifications for the correct value. (C8 Motor Rated Speed)
E5 C9 = 0	This parameter is set to zero (0). To correct the error, you must set a non-zero value. Refer to your motor specifications for the correct value. (C9 Number of Motor Pole Pairs)
E6 Resistance = 0	This parameter is set to zero (0). To correct the error, you must set a non-zero value. Refer to your motor specifications for the correct value. (C7 Motor Winding Resistance)
E7 Ke = 0	This parameter is set to zero (0). To correct the error, you must set a non-zero value. Refer to your motor specifications for the correct value. (C15 Motor Ke)

Error	Resolution
E8 Continuous Current = 0	This parameter is set to zero (0). To correct the error, you must set a non-zero value. Refer to your motor specifications for the correct value. (C1 Continuous Current)
E9 Peak Current = 0	This parameter is set to zero (0). To correct the error, you must set a non-zero value. Refer to your motor specifications for the correct value. (C3 Peak Current)
E10 Used Drive Continuous Current Warning	The continuous current of the motor is higher than the continuous current rating of the drive/controller. Use the continuous current rating for the drive/controller.
E11 Torque Rating > Peak Power Rating Warning	The motor's torque rating is too high for the power level of the drive/controller. Use the drive/controller's torque rating.
E12 Used Drive Peak Current Warning	The peak current of the motor is higher than the peak current rating of the drive/controller. Use the drive/controller's value for peak current.
E13 Inertia = 0	This parameter is set to zero (0). The drive/controller will not enable Velocity or Position Modes. To correct the error, you must set to a non-zero value. Refer to your motor specifications for the correct value. (C11 Motor Rotor Inertia / Forcer Mass)
E14 Damping = 0	This parameter is set to zero (0). The drive/controller will not enable Velocity or Position Modes. To correct the error, you must set to a non-zero value. Refer to your motor specifications for the correct value. (C10 Motor Damping)
E26 Drive Faulted	The drive/controller is faulted.
E27 Bridge Hardware Fault	Excessive current or short on the H-bridge.
E28 Bridge Temperature Fault	Excessive current being commanded: 1. If the application is operating in the peak range, limiting the peak current setting with DMTLIM can limit the current commanded and lower the bridge temperature. Default DMTLIM is 3 x continuous current, perhaps lowering it to 2.5 x continuous current or 2 x continuous current can help. This, however, will limit the motor's available torque, which may increase position error and possibly cause a position error fault. 2. Issue a DIFOLD 1 command. This command enables the "current foldback" feature in the drive. However, a drive in "foldback" mode can available torque, which may increase position error and possibly cause a position error fault. 3. Use a larger IPA amplifier, which would be capable of higher current outputs.
E29 Drive Over-Voltage	The bus voltage is too high (>410 VDC). Lower AC Mains voltage (Motor Input Power) and check for excessive regeneration power. (S22 Transfer Bus Voltage)
E30 Drive Under-Voltage	The bus voltage is too low (<85 VDC) or there is overly aggressive acceleration or deceleration. Raise AC Mains voltage (Motor Input Power). (S22 Transfer Bus Voltage)
E31 Bridge Foldback	Drive/controller current was limited to prevent overheating (warning only).

Error	Resolution
E32 Power Regeneration Fault	Check the Regeneration resistor for a short.
E34 Drive Temperature Fault	Wait for the drive/controller to cool down.
E35 Motor Thermal Model Fault	The motor thermal model has determined the motor is too hot. Wait for the motor to cool, and then re-enable the drive/controller. (S21 Transfer Mode Temperature)
E36 Motor Temperature Fault	Motor thermal switch has tripped. Wait for the motor to cool, then re-enable the drive/controller. (S21 Transfer Mode Temperature)
E37 Bad Hall State	A problem with the Hall sensors exists. Check the Hall state wiring. (S27 Transfer Hall State)
E38 Feedback Failure	Feedback not present or the signal level is incorrect. (S16 Transfer Position of Encoder; S27 Transfer Hall State)
E39 Drive Disabled	The drive/controller is disabled.
E40 PWM Not Active	The H-bridge is not switching.
E41 Power Regeneration Warning	The drive/controller regenerated (warning only).
E42 Shaft Power Limited Warning	Shaft power is limited to the rated output to protect the drive/controller(warning only).
E43 Excessive Speed at Enable	The motor was turning too fast when the drive/controller was enabled.
E47 Low Voltage Enable	No motor power was present when the drive/controller was enabled.
E48 Control Power Active	The drive/controller is in Control power mode. No motor power is present.
E49 Alignment Error	The ALIGN command did not complete successfully. (S16 Transfer Position of Encoder; S27 Transfer Hall State)
E50 Hardware Fault	The device experienced an unexpected internal hardware malfunction.
E51 Hardware Watchdog Error	An internal hardware watchdog event has been triggered.
E52 Encoder Read Fault	The drive/controller determined there was loss of feedback. Check the feedback wiring. (S16 Transfer Position of Encoder; S27 Transfer Hall State)
E54 Encoder Loss Fault	The IPA could no longer detect the encoder. Check the encoder connections. Check/modify the value of C137 or set to zero (0) to disable this error.
E56 Factory Programming Error	Factory parameters have been corrupted. Contact the factory for repair.
E57 Torque Enable Fault	The torque enable input has been turned off externally and torque has been suspended to the motor.

Hall Sensors

The troubleshooting procedures in this section assume that a terminal emulator connection is established with the IPA. The procedures assist you in resolving a Hall fault (ERROR bit E37-Bad Hall State). Several problems can cause a Hall fault; the following checklist will help identify these problems.

Troubleshooting Checklist

1 Does THALL report either 0 or 7?

If yes, see Problem 1 or Problem 2, below.

2 Does THALL change if you move the motor by hand?

If no, see Problem 2, below.

3 Does THALL have six distinct Hall states from 1 to 6? (No numerical order is necessary.)

If no, see Problem 2, below.

4 Does THALL report the six distinct Hall states n times as the rotor turns one revolution, where n is equal to the number of pole-pairs (DPOLE)? (Linear motors: n = pitch)

If no, see Problem 2 or Problem 3, below.

5 Does THALL report the Hall state sequence [1, 5, 4, 6, 2, 3, 1...] as the motor turns clockwise? (Clockwise means TPE is increasing when Bit 8455 set to zero (Ø); it is also the direction the motor turns in DMODE1.)

If no, see Problem 4, below.

6 Does DRERROR report a Hall fault each time the drive is enabled (DRIVEON AXIS0), even though the Hall state sequence is correct?

If yes, see Problem 4, below.

7 Does the Hall fault occur irregularly?

If yes, see Problem 6, below.

Possible Problems

Problem 1

No Hall states are seen by the drive/controller.

Problem 2

The cable is not connected, or is connected incorrectly (incorrectly wired).

Problem 3

Motor pole pairs or the pitch distance (for linear servo motors) is not set correctly.

Problem 4

Either the motor wires or the Hall wires are connected incorrectly.

- Use Procedure 1—Motor Wires to fix this problem by changing the motor wires.
- Use Procedure 2—Hall Wires to fix this problem by changing the Hall wires.

Problem 5

The Hall wires or the encoder wires may have loose connections, causing intermittent faults.

Problem 6

Noise induced on the Hall signals from routing the motor feedback cable next to high-voltage cables. Here are some examples:

- Unshielded motor cables (use R-clamp with shielded motor cable, see System Installation Overview in "System Installation Overview")
- Cutting cables and installing interconnects, routing feedback conductors next to high power conductors. Either contact the factory for extension cables or use cable glands on cabinets that clamp around the cable.
- Inductive loads missing flyback diodes (motor starters, ice cube relays, solenoids, brakes)
- Unshielded wires with high power (coiled wires for AC mains filters, regen resistor cables)

Keep high power cables away from low power cables (such as the feedback cable). If they need to cross, cross at right angles.

Procedures

Procedure 1—Motor Wires

Use this procedure to connect your motor wires to the IPA.

1 With the motor's feedback cable connected to the drive/controller, randomly connect two motor input power wires and slowly apply a positive voltage with respect to the third. See Figure 33 on page 74.

Note: A variable low voltage (5 to 24V) current limiting power supply (less than continuous current rating of motor) is preferred.



Warning: This procedure could damage the motor. Slowly increase the voltage until the motor moves. Do not exceed the rated current.

Safety Warning: **High-performance motion control equipment is capable of producing rapid movement and very high forces. Unexpected motion may occur especially during the development of controller programs. KEEP WELL CLEAR of any machinery driven by stepper or servo motors. Never touch any part of the equipment while it is in operation.**

2 If THALL reports a 1, 2, or 4, change SHALL from either 0 to 1 or from 1 to 0. After you change SHALL, reset the drive/controller.

3 Repeat step 1 until THALL reports a value of 6.

4 The wire on the negative voltage or ground is motor wire W. The two wires at the positive voltage are U and V.

Now there are two possibilities:

a. Connect the motor wires to the terminals. Operate the drive in DMODE1. If the motor does not turn in the clockwise direction, exchange motor wires U and V. Verify that the Bit 8455 command is set to zero (Ø).

b. Put positive voltage on motor wire W together with either U or V and put negative voltage or ground on the remaining wire. If THALL reports a value of 3, the wire at the negative voltage is V. If THALL reports a value of 5, the wire at the negative voltage is U.

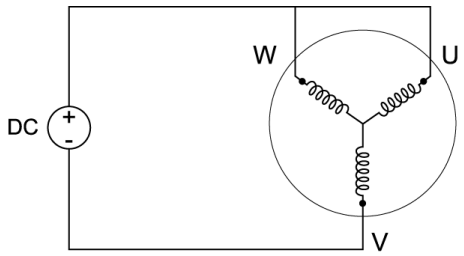

Figure 33. - *Hall Connection Diagram*

Procedure 2—Hall Wires

Use this procedure to connect your Hall wires to the IPA.

1 First operate the IPA in DMODE1 and verify that the motor turns clockwise. If not, swap any two motor wires.

2 Remove the motor input power leads, leaving the feedback cable connected to the drive/controller. Connect motor input power wires U and V and slowly apply a positive voltage with respect to W. (See Figure 33).

Note: **A variable low voltage (5-24V) current limiting power supply (less than continuous current rating of motor) is preferred.**

Warning: **This procedure could damage the motor. Slowly increase the voltage until the motor moves. Do not exceed the rated current.**

Safety Warning: **High-performance motion control equipment is capable of producing rapid movement and very high forces. Unexpected motion may occur especially during the development of controller programs. KEEP WELL CLEAR of any machinery driven by stepper or servo motors. Never touch any part of the equipment while it is in operation.**

3 If THALL reports a 1, 2, or 4, change SHALL from either 0 to 1 or from 1 to 0. After you change SHALL, reset the drive/controller.

4 Change the Hall wires until THALL reports a value of 6.

5 Connect motor wires U and W and slowly apply a positive voltage with respect to V.

6 If THALL does not report a value of 3, change Hall wires B and C. If THALL reports a value of 3, the wires are connected correctly.

The following table summarizes phase voltages and their corresponding Hall states. Starting with SHALL=Ø and the phase voltages as shown, the THALL command should report the Hall states that match the "Correct" column. If instead THALL reports Hall states that match the "Use SHALL=1" column, enter SHALL=1 and reset the drive/controller. The Hall states should now match the "Correct" column. For more information, see Figure 34 on page 76.

Configuring Hall Sensors

Phase			Hall State	
U	V	W	Correct	Use SHALL=1
—	—	+	1	6
—	+	+	5	2
—	+	—	4	3
+	+	—	6	1
+	—	—	2	5
+	—	+	3	4

Figure 34 illustrates the alignment of phases U, V, and W with Halls 1, 2, and 3 as viewed from the front of the shaft. The illustration assumes the following:

- Hall signals that are High equal TRUE signals.
- Hall 1 is the least significant bit (LSB).
- Hall 3 is the most significant bit (MSB).
- There is one hall cycle and one electrical cycle per pole pair on the motor.

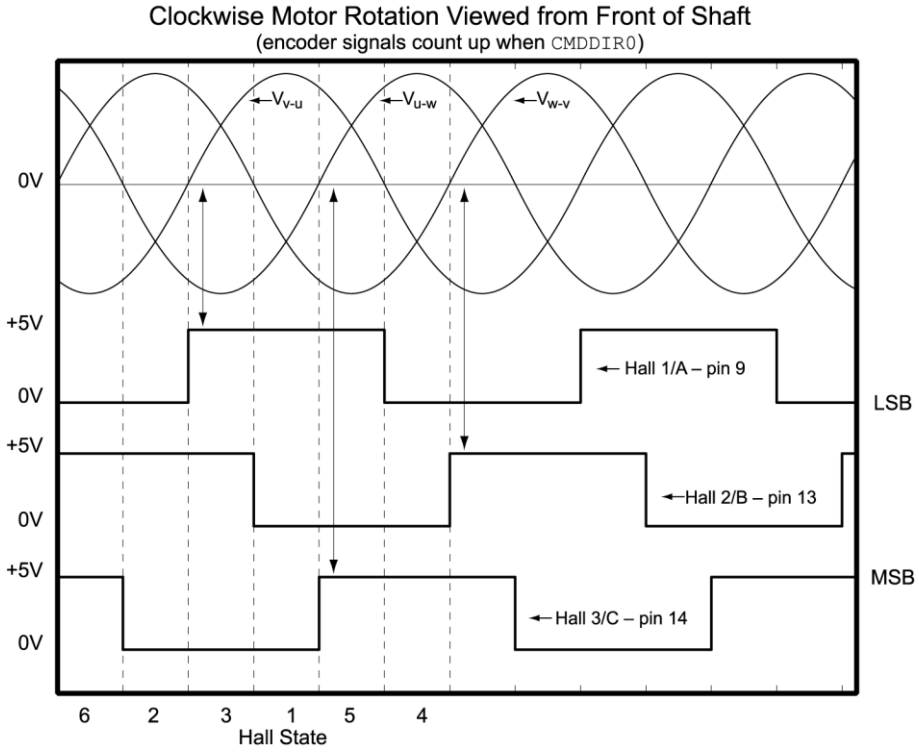

Figure 34. - *Motor Terminal Voltages (back EMF) and Hall Sensor Signals*

CHAPTER 6
Torque Enable Safety Circuitry



Warning: **THIS EQUIPMENT IF USED INCORRECTLY IS POTENTIALLY DANGEROUS. THEREFORE UNDER NO CIRCUMSTANCES SHOULD IT BE USED BEFORE THESE INSTRUCTIONS HAVE BEEN READ AND UNDERSTOOD BY THE END USER WHO SHOULD BE APPROPRIATELY QUALIFIED TO OPERATE THE EQUIPMENT.**

It is the user's responsibility to:

1. Risk assess the machine.
2. Design, implement and assess an appropriate solution for each application to meet all relevant safety requirements.

Note: **Torque Enable is an electronic inhibit intended for use during normal operation of the machine. It is not intended for use during machine maintenance, repair, replacement or other similar activities. For these activities, recognized electrical power isolation devices and lock-off procedures should be used.**

Torque Enable Functional Description

The IPA provides dual Torque Enable channels as a means of preventing the drive from delivering rotational force to its connected electric motor or linear force for a linear motor. To ensure a high degree of safety, two independent Torque Enable control channels are implemented in hardware. The Torque Enable circuit in the IPA is designed such that a fault in one control channel will not affect the other channel's ability to prevent the drive from starting, i.e. the Torque Enable function of the IPA drive is tolerant to any single fault. It may not be tolerant to an accumulation of faults. If one or both Torque Enable control inputs requests the torque to be disabled, the drive will not start, even if the drive's software malfunctions and tries to cause the motor to turn.

The Torque Enable function is implemented in hardware and overrides all software activities. The only software involvement is to report torque status to the user via error and fault bits.

User Connections

The Torque Enable terminals are on the Auxiliary connector mounted on the top of the IPA. Terminal designations are:

Signal	Pin	Description
TRQ_EN1	2	Torque enable input 1
TRQ_EN2	3	Torque enable input 1
TRQ_EN_24V*	4	Bypass power for TE (limited to 30mA)
/TRQ_EN1	8	Negative input torque enable input 1
/TRQ_EN2	9	Negative input torque enable input 2
TRQ_EN_COM	10	Common for TRQ_EN_24V



Warning: **The IPA comes with the Torque Enable connector pre-wired to always enable the drive's ability to provide torque. In order to disable torque and wire the drive to your safety system, you must remove the two 3-pronged jumpers between pins 2, 3, 4 and pins 8, 9, 10.**

The IPA pin TRQ_EN_24V is internally limited to 30mA and is intended only as a bypass of the Torque Enable circuitry for those applications wishing to disable this feature. Do not power external circuitry with this output.

Torque Enable Technical Specification

Inputs Specification

Recommended input voltage for low level	0V to +5V
Recommended input voltage for high level	+21.6V to +26.4V
Typical input threshold voltage	+10.5V
Indeterminate input range	+5V to +15V. Function is undefined.
Absolute maximum input voltage	-30V to +30V
Typical input current	9mA @ 24V
Fault detection time	2.3 sec typical: < 1.6 sec will not generate a fault > 3.0 sec will generate a fault.

Truth Table

State	TRQ_EN1	TRQ_EN2	Drive Function
Torque Disabled	0V	0V	Drive cannot start or supply power to the motor. Torque Enable fault is reported.
Abnormal one channel detection	24V	0V	Drive cannot start or supply power to the motor. Torque Enable fault is reported. If condition exists for more than 3.0 seconds, the Torque Enable fault will lock and a Torque Enable Unhealthy state will be logged. The drive cannot start until the fault is rectified, all power is removed, the drive allowed to fully power-down and power reapplied.
	0V	24V	
Torque Enabled	24V	24V	Drive is enabled to run under software control and hardware will allow power to be supplied to the motor.

Ideal Operation

In ideal operation, both inputs TRQ_EN1 and TRQ_EN2 should change state simultaneously reflecting true dual-channel operation as intended.

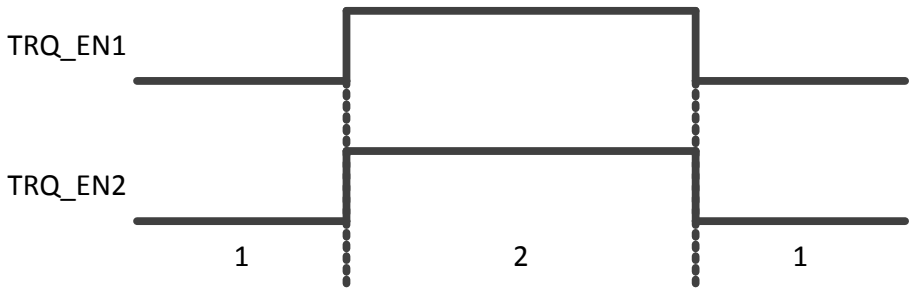

States:

1. Both inputs are low. Hardware prevents the drive from starting. This is the torque disabled state of the drive.
2. Both inputs are high. Drive is able to run under software control.

Typical Operation

In typical operation, there can be a small time difference between changes of state on TRQ_EN1 and TRQ_EN2, due to different delays in the operation of two sets of relay contacts.

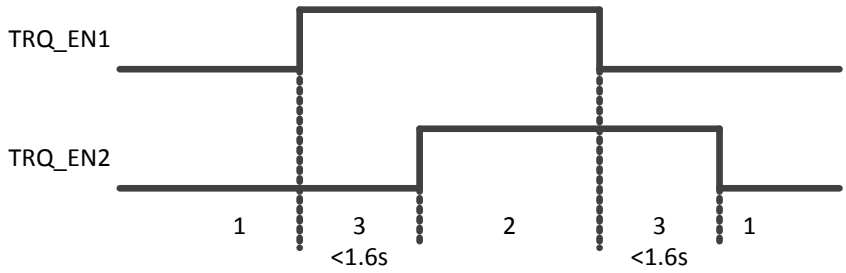

States:

1. Both inputs are low. Hardware prevents the drive from starting. This is the torque disabled state of the drive.
2. Both inputs are high. Drive is able to run under software control.
3. One input is high and the other input is low. Drive is tripped and cannot start due to torque disabled state. Normal operation allows this state to persist for up to 1.6 seconds which is the minimum fault detection time required to generate a fault (3.0 seconds is the maximum). These tolerable time differences are normally caused by switches or relays; they should be kept as short as possible.

Fault Operation

A fault is always detected when TRQ_EN1 and TRQ_EN2 are in opposite states for more than 3.0 seconds.

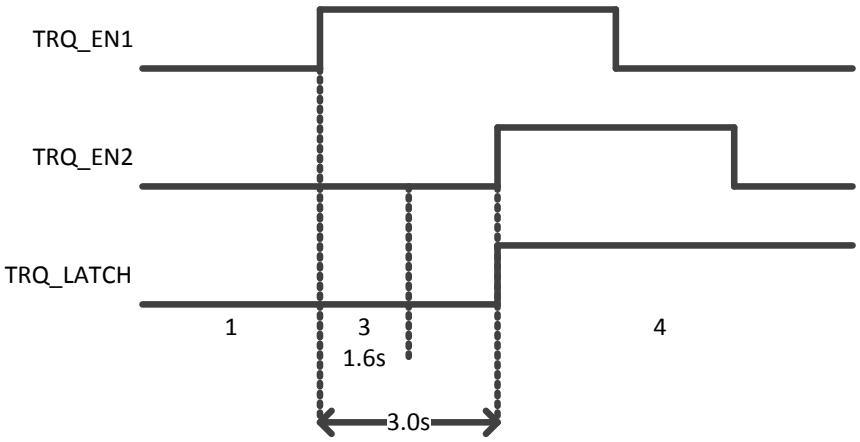

States:

1. Both inputs are low. Hardware prevents the drive from starting. This is the torque disabled state of the drive.

3. One input is high and the other input is low. Torque is disabled and prevents the drive from starting. In this example, this state persists for more than 3.0 seconds (being the maximum fault detection time), after which time the IPA logic transitions to state 4 without further changes in input state. The IPA has detected a fault or single-channel operation.

4. The fault state (one input high, the other input low) has persisted for longer than 3.0 seconds (being the maximum fault detection time). The IPA hardware logic locks into state 4. The drive is tripped and the torque disabled function prevents the drive from starting. To exit from state 4, the drive must be powered off (all power removed including any auxiliary 24VDC) and back on.

The above states are explained in the following diagram:

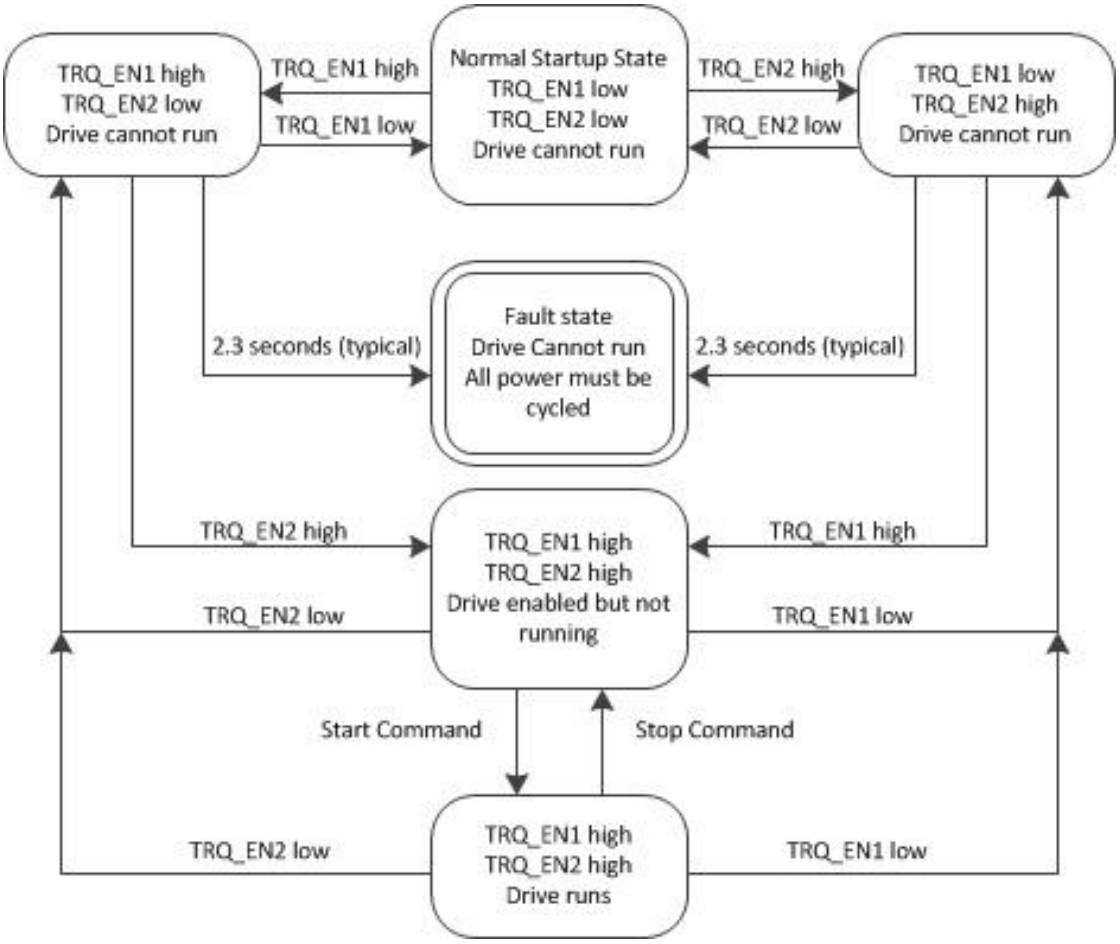

CHAPTER 7
Additional Specifications

Amplifier

Description	Specification
Control Power: all models	120/240 VAC (90-265 VAC) Single Phase Mains Control Power
Motor Power: all models	Single Phase AC Input, 120/240 VAC (90-265 VAC) 16 or 32 kHz switching frequency (motor dependent), pulse-width modulated (PWM) with 3-phase motor output
Current Loop Update Rate	31.25 μ s
Velocity and Position Loop	125 μ s

Performance

Description	Specification
Accuracy	±1 encoder count; encoder dependent
Maximum Primary Encoder Input Freq. (pre-quadrature)	2.4 MHz
Maximum Secondary Encoder Input Freq. (pre-quadrature)	1 MHz

Protective Circuits

Short Circuit Protection

The IPA drive has an internal circuit that protects it from short circuits between one motor terminal to another (phase to phase), or from any motor terminal to earth.

Description	Specification
Short Circuit Fault—Cause	Phase-to-phase short circuit Phase-to-earth short circuit
Results of Fault	Power to motor is turned off Drive status word is updated via Ethernet to the PC (See the table "LED Short Circuit Fault")

LED Short Circuit Fault

LED Middle	LED Top
Yellow & 1 Green (blinking)	Red

Resetting the fault

To clear the latched fault, choose one of the following methods:

Cycle power to the drive/controller.

–or–

Open ACR-View and issue the DRIVE RES AXIS0 command to the IPA.

Drive/Controller Over-Temperature Protection

The IPA over-temperature circuit monitors the drive/controller's internal temperature. If the sensors exceed the threshold temperature, the unit issues an over-temperature fault.

Threshold Temperature

Description	Specification
All models	80°C (176°F) minimum
Results of Fault	Power to motor is turned off Drive status word is updated via Ethernet to the PC (See the table "LED Drive Over-Temperature Fault")

LED Drive Over-Temperature Fault

LED Middle	LED Top
Yellow & 3 Green (blinking)	Red

Resetting the fault

After the internal temperature has dropped below the values shown in the "Reset Temperature Values" table, you can clear the latched fault. There are two methods available:

Cycle power to the drive/controller.

–or–

Open ACR-View and issue the DRIVE RES AXIS0 command to the IPA.

Reset Temperature Values

Description	Specification
All models	75°C (167°F)

Under-Voltage Protection

The unit's under voltage protection circuit monitors AC input voltage. If the voltage falls below a specific value while the IPA is operating, the unit issues an under-voltage fault and turns off power to the motor output terminals (Output Power connector). This allows the motor to freewheel to a stop.



Warning: **When an under-voltage protection fault occurs, the IPA disables power to its motor output terminals on the Output Power connector. This cuts all control to the motor and allows the load to freewheel to a stop.**

Threshold Voltage

Description	Specification
All models	Voltage below 70 VAC trips fault*
Results of Fault	Power to motor is turned off Drive status word is updated via Ethernet to the PC (See the table "LED Under-Voltage Fault")

*Custom firmware may be used to lower this, such as for the MX80L. Contact your Parker ATC for customs.

LED Under-Voltage Fault

LED Middle	LED Top
Yellow	Red

Resetting the fault

To clear the latched fault, choose one of the following methods:

Cycle power to the drive/controller.

–or–

Open ACR-View and issue the DRIVE RES AXIS0 command to the IPA.

Over-Voltage Protection

The IPA over-voltage circuit protects the drive from excessive regeneration. If the voltage on the motor output terminals rises above the threshold voltage, the drive/controller issues an over-voltage fault and turns off power to the motor output terminals (Output Power connector). This allows the motor to freewheel to a stop.



Warning: **When an over-voltage protection fault occurs, the IPA disables power to its motor output terminals on the Output Power connector. This cuts all control to the motor and allows the load to freewheel.**

Threshold Voltage

Description	Specification
All Models	410 VDC
Results of Fault	Power to motor is turned off Drive status word is updated via Ethernet to the PC (See the table "LED Over-Voltage Fault")

LED Over-Voltage Fault

LED Left	LED Right
Yellow & 4 Green (blinking)	Red

Resetting the fault

To clear the latched fault, choose one of the following methods:

Cycle power to the drive/controller.

–or–

Open ACR-View and issue the DRIVE RES AXIS0 command to the IPA.



Warning: **Over-voltage protection monitors only the motor output terminals (DC motor bus). It does not protect against an over voltage on the AC input terminals, which can permanently damage the drive/controller.**

Current Foldback

The IPA's current foldback circuit helps to protect the unit from damage due to prolonged high currents. If your unit is operating above its continuous current rating, see Figure 35 to predict the number of seconds until foldback will occur. For example, the figure shows that at the drive/controller's peak current rating (250% of continuous), foldback will occur after six seconds. After operating at the its peak current, the IPA will reduce the drive/controller current to 80% of the its continuous rating for 60 seconds. This is to ensure the unit's average continuous current rating is not exceeded.

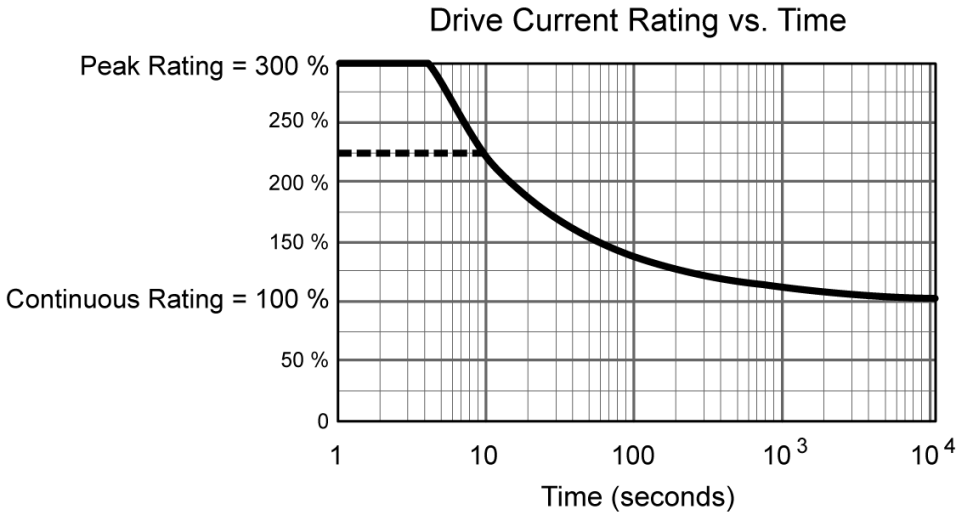

Figure 35. - *Time Until Current Foldback Occurs*

Cables

EMC Ready Cables

Many Parker cables are EMC installation ready. If installed according to instructions provided under "A Highly-Immune, Low-Emission Installation – Meeting the Requirements of the Electromagnetic Compatibility (EMC) Directive" on page 93, these cables are designed to aid the user in gaining European Compliance, and are thus an integral part of a CE system solution. EMC cables add RF screening and bonding to reduce emissions, increase immunity, and provide high integrity safety Earth bonding. They also help to reduce problems in high electrical noise environments.

Non-EMC Cables

Parker also offers non-EMC cables, for applications where CE compliance is not required, and where ambient electrical noise does not cause problems. Because these cables are either unshielded, or contain simple foil shielding terminated by a drain wire, they do not provide significant shielding of electrical noise at high frequencies.

CHAPTER 8
Regulatory Compliance UL and CE

System Installation Overview

This chapter contains information related to installation methods and practices that can be used to aid the systems integrator or machine builder in designing a compliant installation, meeting the needs of global regulatory agencies.

The installation overview is divided in to two sections—"Safety" and "Electromagnetic Compatibility (or EMC)".

It is recommended that the installer *read this entire overview*, prior to taking any action, as some of the required installation methods can be leveraged across both Safety and EMC installations.

Although Parker IPA drives are technically considered motion control components and are therefore not within the scope of the European union's CE (Conformité Européenne) directives, Parker has taken the initiative to provide its customers with easy to integrate motion control products that meet global requirements.

The following constitutes what is typically required to install IPA drives into a CE compliant system. Additional installation measures may be required at some locations. The machine builder has ultimate responsibility for machine compliance.

General Safety Considerations

These products are intended for installation according to the appropriate safety procedures including those laid down by the local supply authority regulations. The recommendations provided are based on the requirements of the Low Voltage Directive and specifically on IEC 61010-1. Never compromise safety to achieve EMC compliance. In the event of a conflict between safety regulations and the following EMC recommendations, safety regulations always take precedence.

General EMC Considerations

The IPA product is a motion control component and as such will be built in to another machine that will in turn be required to comply with the relevant directives of the marketplace.

It is important to remember that for specific installations, the full protection requirements of the EMC directive 2004/108/EC need to be met before the system is taken in to service. This must be verified either by inspection or by testing. The following EMC installation recommendations are intended to assist in ensuring that the requirements of the EMC directive are met. It may be necessary to take additional measures in certain circumstances and at specific locations.

It should be stressed that although these recommendations are based on the expertise acquired during the design and development of the IPA products, and on tests carried out on similar products, it is impossible for Parker to guarantee compliance of any particular installation. Compliance will be strongly influenced by the physical and electrical details of the installation and the performance of other system components. Nevertheless, it is important to follow *all* the installation recommendations if an adequate level of compliance is to be achieved.

Installing the IPA Drive

Only qualified, skilled electrical technicians familiar with local safety requirements should install this product. For service, the drive must be returned to an authorized service center. There are no user serviceable parts inside the chassis. In certain circumstances, opening the cover may void the product warranty. The IPA drive is a vented product. To prevent material spilling into the drive, mount it under an overhang or in a suitable enclosure.

Per IEC 61800-3 ed2.1 section 3.2.5, the IPA is considered a PDS (Power Drive System) of rated voltage less than 1000V, intended for use in the second environment (industrial) and not intended for direct use in the first environment (residential). This means only those individuals familiar with the EMC requirements of power drive systems should install this product and that this product is designed for connection to mains distribution networks other than low-voltage networks, which may supply domestic premises. The drives can tolerate atmospheric pollution degree 2, which means only dry, non-conductive pollution is acceptable.

IPA drives have been shown to meet the requirements of both the European LVD & EMC directives when installed according to the recommendations given within this section. It is recommended the drive be installed in an enclosure to protect it from atmospheric and industrial process contaminants and to prevent operator access while power is applied. Metal equipment cabinets are ideally suited for housing the equipment since they can provide operator protection, EMC screening, and can be fitted with interlocks arranged to remove all hazardous motor and drive power when the cabinet door is opened. Do not arrange interlocks to open circuit the motor phase connections while the system is still powered, as this could cause damage to the drive.

Precautions

During installation, take the normal precautions against damage caused by electrostatic discharges. Wear earth wrist straps. A switch or circuit breaker must be included in the installation, which must be clearly marked as the disconnecting device and should be within easy reach of the machine operator.

The IPA Drive has exposed high voltage terminals. In order to comply with the safety requirements pertaining to European Compliance, and other authorities, the drive must be mounted in such a way as to restrict access to these terminals during normal operation.

A Safe Installation – Meeting the Requirements of the Low Voltage Directive (LVD)

In order to comply with the requirements of the European Union's Low Voltage Directive, the following installation measures must be taken.

- Mains fuses must be installed on all mains input lines carrying operating current.
- Drive Protective Earth Conductor must be connected directly to a reliable system safety Earth point. Total resistance from Drive's Protective Conductor Terminal to a Reliable System Safety Earth must not exceed 0.1 Ohm, and must be capable of carrying 25A of Fault Current.
- Motor safety earth conductor (for motor voltages greater than or equal to 75 volts) must be connected to the drive's Motor Earth terminal, marked with ⏚.
- The drive must be installed in a manner that prevents operator access to hazardous live terminals during normal operation.

Additional safety measures may be required within your particular market, please consult you local regulatory agency for additional requirements.

A Highly-Immune, Low-Emission Installation – Meeting the Requirements of the Electromagnetic Compatibility (EMC) Directive

The following information was compiled to aid the machine builder or systems integrator in gaining EMC compliance. For effective control of Conducted and Radiated Emissions, along with maximizing the IPA Drive's inherent noise immunity, the following recommendations should be followed. A drawing of a typical EMC installation is shown below.

Mount the Drive and all components to a clean (not painted), earthed, metal panel. For proper control of Electrical Noise, paint must be removed from areas providing RF bonding such as the Drive and mains filter mounting location and cable R-Clamps, etc.

IMPORTANT: To reduce the risk of electrical noise entering your system you must properly earth ground the enclosure, and remove all paint and other non-conductive surface coatings from the panel mounting surface and RF earth bonding locations.

If you mount the IPA drive in an equipment cabinet, terminate cable braids (screens) at the entrance of the enclosure. This can be easily accomplished using the "additional EMC installation hardware" shown below.



The only exception is for the motor braid, which must return to the drive's R-Clamp (located on the front of the IPA drive). *Do not* return the motor braid to any other location as its function is to return high-frequency chopping current back to the drive. This may require mounting an auxiliary connector on a sub-panel insulated from the main cabinet, or using a connector having an insulated internal screen from the connector housing.

The shields of all other cables that enter or exit the enclosure must be RF bonded to the enclosure entrance point using an R-Clamp, bulkhead clamshell clamp, or other 360° bonding technique. This ensures that no stray noise will enter or exit the enclosure. The following drawing illustrates 360° bonding techniques.

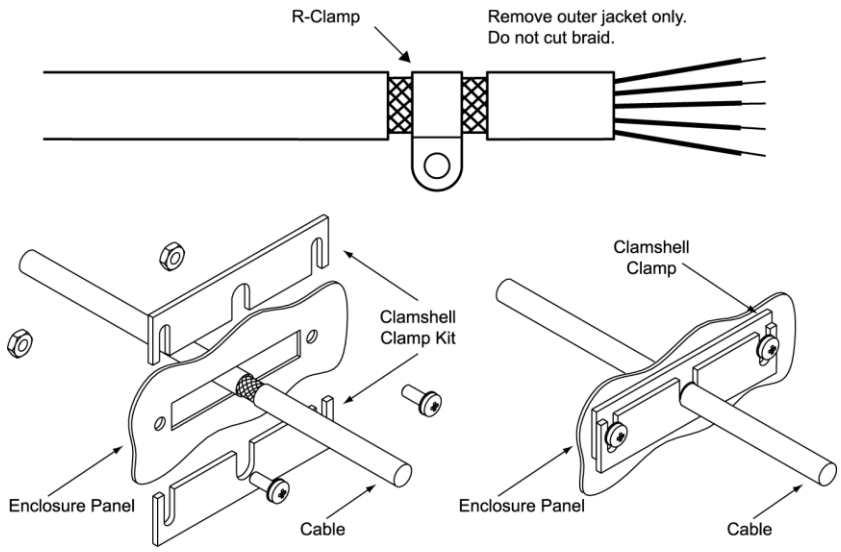

Figure 36. - *360° Bonding Techniques*

All braid termination connections must remain secure. For small diameter cables, it may be necessary to fold back the braid to increase the effective diameter of the cable so that R-Clamps are secure.

Within the cabinet itself, all the motor cables should lie in the same trunking as far as possible. Keep these and any high power cables separate from any low-level control signal cables. This applies particularly where the control cables are unscreened and run close to the drive. If high power and low-level cables must cross, attempt to avoid running them parallel and cross them at 90 degrees.

There must be no break in the 360° coverage that the screen provides around the cable conductors. Pigtail braid connections will adversely affect EMC performance and are to be avoided.

A steel equipment cabinet will screen radiated emissions provided all panels are bonded to a central earth point. Separate earth circuits are commonly used within equipment cabinets to minimize the interaction between independent circuits. A circuit switching large currents and sharing a common earth return with another low-level signal circuit could conduct electrical noise into the low level circuit, thereby possibly interfering with its operation. For this reason, so called 'dirty earth' and 'clean earth' circuits may be formed within the same cabinet, but all such circuits will eventually need to be returned to the cabinet's main star earth point.

Mount the individual drives and EMC filter on a metal earth plane. The earth plane will have its own individual star point earth that should be hard wired (using an insulated copper conductor) back to the cabinet's 'clean earth' connection point.

Panel mounting can provide a similar measure of EMC performance if strict attention is paid to cable screen termination and cable layout.

Again, the machine builders primary focus should be on ensuring operators are kept safe from all hazards.

Install a Mains filter. IPA drives require a mains supply filter to meet EMC emission requirements. It is recommended that the drive is mounted on a conductive panel which is shared with the EMC filters. If the panel has a paint finish, it will be necessary to remove the paint in certain areas to ensure filters and drive make a good large-area surface metal to metal contact between filter case and panel.

You must install a mains power line filter on both the Motor power mains and Control power mains if they are to be used independently. Use the following tables to determine the correct filter for your specific application.

Control Power

Control power is 1 Ampere, maximum. Any of the following filters works with all models of the IPA drive.

Control Power Filter Selection

Filter	Manufacturer
FN670-3/06	Schaffner
6EP1 (160937-5)	Corcom
10EP1 (160937-7)[1,]	Corcom
FN2070-10/06	Schaffner
1. Available from Parker: 10 Amp filter—part number 47-016140-01	

Mains Motor Power

Mains Motor Power Filter Selection

Filter	Continuous Current (Amps)	IPA04-HC	IPA15-HC
6EP1 (160937-5)[1]	5 at 240 VAC		
10EP1 (160937-7)[1, 3]	8 at 240 VAC	x	x
FN2070-10/06[2]	10 at 240 VAC	x	x
FN2070-12/06	12 at 240 VAC	x	x
FN2070-16/06[2, 3]	16 at 240 VAC	x	x
Product with applicable mains filter denoted by "x" 1. Corcom (a division of Tyco Electronics) 2. Schaffner 3. Available from Parker: 10 Amp filter—part number 47-016140-01			

Install transient suppressors. You must install varistors or other voltage surge limiting devices in order to meet the requirements of IEC 61000-4-5. Place a Littelfuse V275LA2ØC, or an equivalent varistor, from line to line and from lines to earth before the mains filter, as shown in the *EMC Installation* drawings. (Intersil, General Electric, and Littelfuse manufacture equivalent varistors.)

Use an EMC-ready motor or a motor that has demonstrated acceptable EMC performance. Motors with shielded cabling or pipe thread style cabling options allow the easiest integration into machines required to bear the CE mark for EMC.

Note: Motors may bear the CE mark. This mark indicates the motor meets the requirements of construction and safety—*not EMC compliance*.

Use shielded cabling with braided and bonded headshells. Parker EMC cabling requires no additional cable preparation. All motor connections must be made using a high quality braided-screen cable. Cables using a metalized plastic bandage for an earth screen are unsuitable and in fact provide very little screening. Care must be taken when terminating the cable screen, the screen itself is comparatively fragile; bending it round a tight radius can seriously affect the screening performance. The selected cable must have a temperature rating which is adequate for the expected operating temperature of the motor case.

All cables must maintain high integrity 360 degree shielding. Parker CE cables are fully shielded and provide the required screening. When you install limit switches and other inputs/outputs, you must observe these noise immunity procedures and practices.

Route cables as shown in Typical LVD/EMC Installation. Route high power cables (motor and mains) at right angles to low power cables (communications and inputs/outputs). Never route high and low power cables parallel to each other.

Mount filters close to the drive and keep the supply wiring as short as practical. Attempt to lay out the wiring in a way that minimizes cross coupling between filtered and non-filtered conductors. This means avoiding running wires from the output of a filter (clean signals) close to those connected to its input (noisy signals). Where you wish to minimize the cross coupling between wires avoid running them side-by-side one another, if they must cross, cross them at 90° to each other. Keep wiring affixed and supported and close to cabinet metalwork.

Cables may require the use of ferrite core suppressors. Some installations may require that you take additional EMC measures. To further increase product immunity and reduce product emissions, you may add clip-on ferrite absorbers to all cables. Parker recommends ferrites with at least 200 ohm impedance at 100 MHz, such as the following:

Steward Ferrite	Part number 28A2024
Fair-Rite	Part number 0443164151

Note: These ferrites are available from Parker Hannifin, part number 47-015956-01. For larger diameter cables (up to 0.722 in O.D.), we recommend Fair-Rite part number 0444176451.

Your Installation may require additional EMC installation hardware (as shown in illustrations). The following clamp kits are available from Parker:

Enclosure Mounting Clamps

Clamp Type	Parker Part Number
R-Clamp Kit (10 per) for models IPA04-HC to IPA15-HC	R CLAMP KIT
R-Clamp Kit (10 per) for models AR-20xE and AR-30xE	R LARGE CLAMP KIT
Clamshell Clamp Kit (2 per) for all models	CLAMSHELL KIT

Note: The Control power input also requires a mains power line filter, varistors, and fuses in order to comply with the relevant CE directives.

Panel Installation, IPA04-HC to IPA15-HC

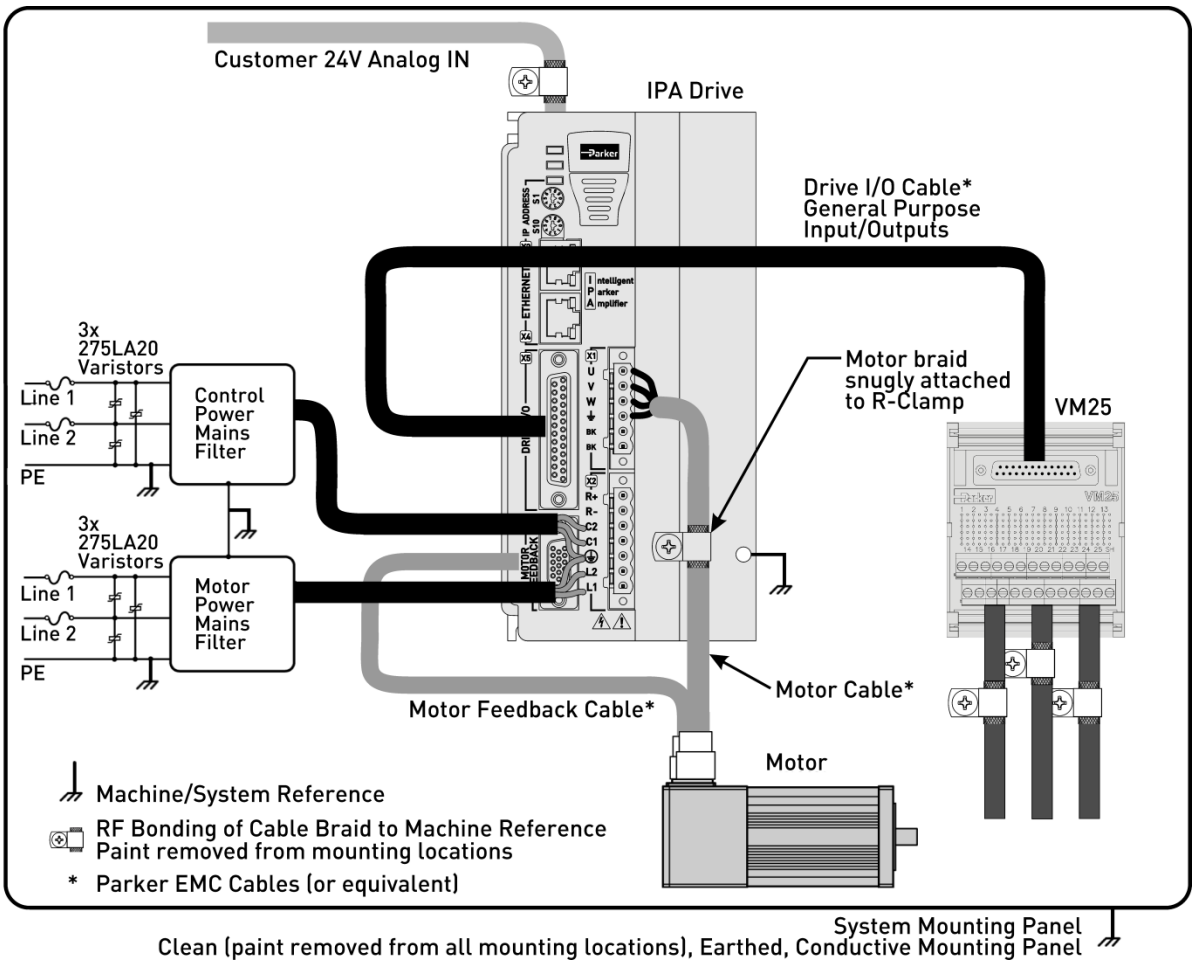

Figure 37. - *Typical LVD/EMC Installation, IPA04-HC to IPA15-HC*

Warning: **This product has been developed for industrial environments. Due to exposed high voltage terminals, this product must not be accessible to users while under normal operation.**

Panel Mounting

The mounting clearance requirements are the same for all IPA drive models and are shown here:

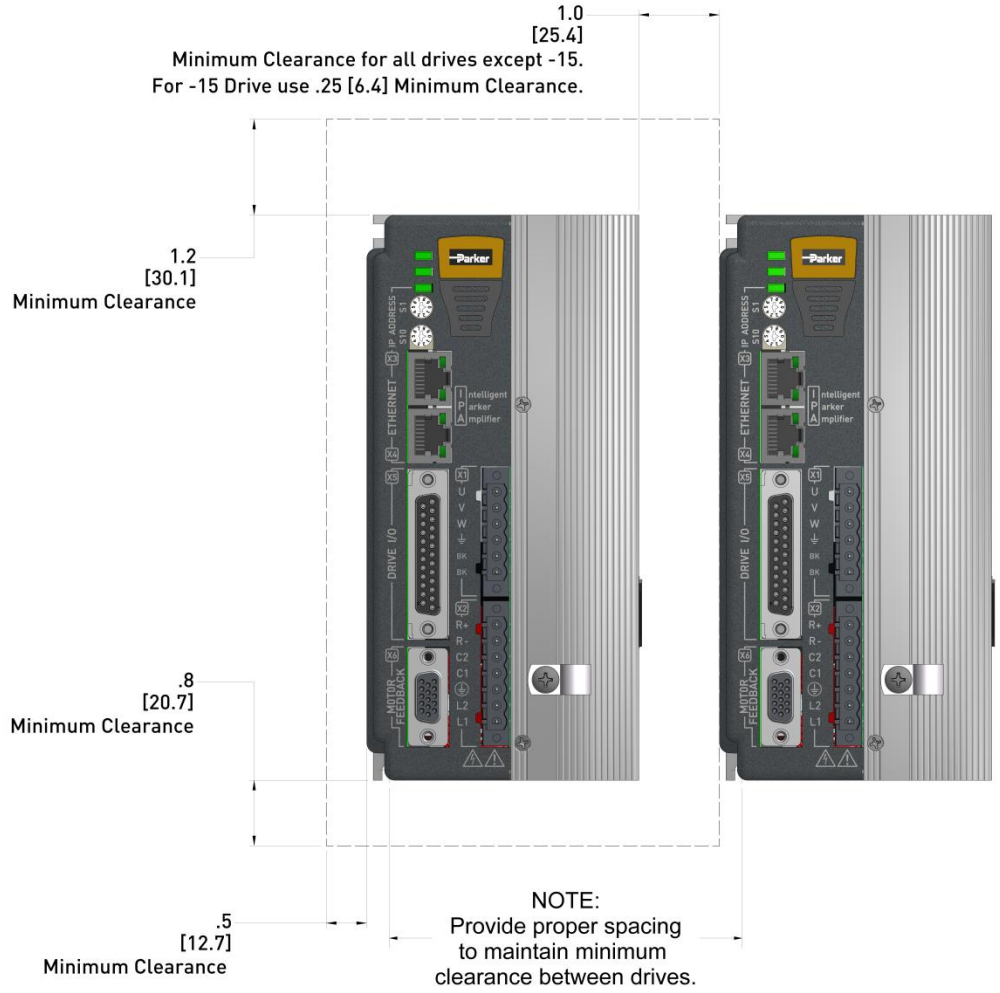

Figure 38. - *Panel Layout Dimensions for the IPA Drive*

Regulatory Agencies

The IPA family of products is designed to meet the requirements of global regulatory agencies.

IPA products have shown compliance with the regulatory agencies in the following list. The list also shows additional steps users must take to ensure compliance.

Agency	Additional Steps User Must Take
UL	Mains fuses
CE (LVD)	Mains fuses; earth connection for drive and motor (if applicable), proper installation
CE (EMC)	Varistors, mains filter, EMC cabling, EMC ready motor, proper installation

Standards of Compliance

UL	508C
CE for LVD	2006/95/EC IEC61010-1 ed3.0
CE for EMC	204/108/EC IEC61800-3 ed2.0

APPENDIX A
VM25 Expansion Module

Overview

The VM25 Expansion Module provides screwcage clamp terminal connections for input/output on the 25-pin Drive I/O connector. The VM25-MC-02 comes with a 2-foot cable that provides easy connection between the VM25 and the drive's 25-pin connector. The VM25 has clips for DIN-rail mounting. The VM25 is ordered separately from the IPA (part number is "VM25-MC-02").

Note: The VM25 module ships with DIN-rail mounting clips installed.

Note: While the module can support the wire gauge, current, and voltage listed above, the molded cable that comes with this module uses 26 AWG conductors. Thus, the connections to this module should not exceed the limitations of a 26 AWG conductor.

VM25-MC-02

Height (from top of DIN rail), in (mm)	0.75 (19)
Width, in (mm)	3.1 (79)
Length, in (mm)	2.5 (63.5)
Connectors	Fixed cage-clamp
Solder Points per pin	2
Cable Length, ft (mm)	2.5 (762)
DIN35-rail mounting clips	Yes
Overall cabinet depth with cable-bend radius, in (mm)	3.5 (89)
Colors	Green/Gray
Operating Voltage	AC/DC 125V
Ambient Operating Temperature	-20 to +50C
Wire Connection	AWG28 to 12

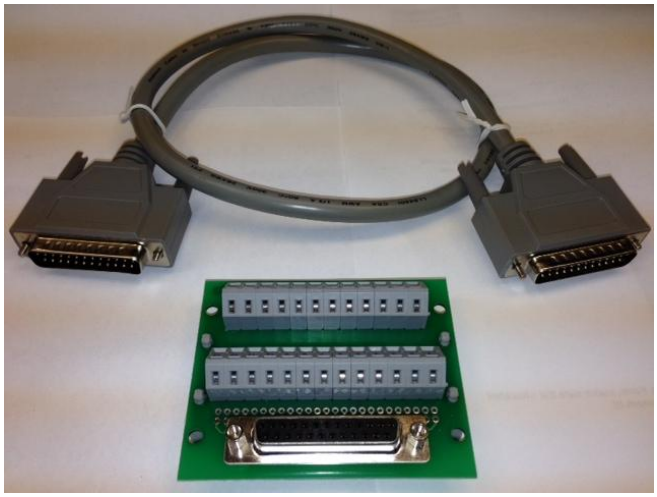

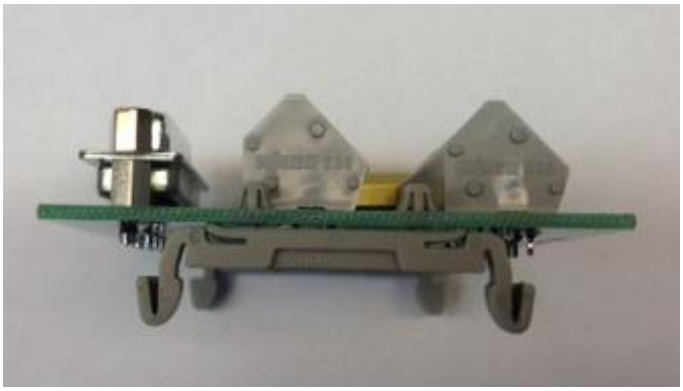

APPENDIX B
IPA with IForce or Ripped Linear Servos

This applications note clarifies the connections with the IForce and Ripped series motors and positioners to the IPA. IForce and Ripped coils and positioners can be supplied with flying lead cables, covered in this appendix. For positioners with the connector box, see "Appendix C."

IForce/Ripped to IPA-Controller Wiring

The IForce and Ripped coils have different color codes based upon the wiring option (such as WD3 or WD7 in the part number). The IForce positioners (T1, T2, T3 and T4) use coils with WD2 wiring option, a separate MHED module that includes optical limits/ home sensors and magnetic hall-effect feedback, and the encoder readhead and scale. The Ripped positioners (TR07, TR10, TR16) use HED connector modules that include both magnetic limits/home and hall-sensors feedback, and encoder readhead and scale.

In 2008 Parker began changing wire color codes, both old and new are shown for reference.

T1, T2, T3 Positioners/110, 210, 310 Coils with Options WD0/WD1/WD2/WD7

Old Color Codes	New Color Codes	IPA Motor Pin
Red	Red/Yellow	**U**
Blue	Blue/Yellow	
White	White/Yellow	**V**
Green	Violet/Yellow	
Black	Black/Yellow	**W**
Brown	Brown/Yellow	
Drain (coils) Green/Yellow (Positioners)	Green/Yellow	**Ground**

T4, TR7, TR10, TR16 Positioners/R7, R10, R16, 410 and ML50 Coils/110, 210, 310 Coils with Options WD3/WD4

Old Color Codes	New Color Codes	IPA Motor Pin
Red	Red/Yellow	**U**
Brown	Brown/Yellow	**V**
Orange	Orange/Yellow	**W**
Drain (coils) Green/Yellow (Positioners)	Green/Yellow	**Ground**

Encoder, Hall and Thermal Sensor Connections

Encoder Cable			Note	IPA Feedback Connector		
Function	**LME Magnetic**	**RGH Optical**		**Pin #**	**Signal**	**Description**
+5V	Brown	Brown		**4**	+5 VDC	+5 VDC Encoder power
Ground	White	White		**3**	DGND	Encoder power return
A/	Yellow	Yellow	*	**8**	ENC A+	Encoder A Channel in
A+	Green	Green	*	**7**	ENC A–	Encoder A Channel in
B+	Blue	Blue		**12**	ENC B+	Encoder B Channel in
B-	Red	Red		**11**	ENC B-	Encoder B Channel in
Z+	Black	Pink		**1**	ENC Z+	Encoder Z Channel in
Z-	Orange	Grey		**2**	ENC Z–	Encoder Z Channel in
Hall Effect Cable						
Function	**Hall Type 1**	**Hall Type 2**	**Note**	**Pin #**	**Signal**	**Description**
+5V	Black	Black		**5**	+5 VDC	+5 VDC Hall power
Ground	White	White		**6**	DGND	Hall power return
Hall C	Yellow	Brown	**	**9**	Hall 1	Hall 1 input
Hall B	Blue	Blue	**	**13**	Hall 2	Hall 2 input
Hall A	Green	Green	**	**14**	Hall 3	Hall 3 input
Motor Cable						
Temp Style1		**Temp Style2**	**Note**	**Pin #**	**Signal**	**Description**
Yellow		Grey		**10**	Thermal+	Motor thermal switch/thermistor
Orange		Violet		**15**	Thermal-	Motor thermal switch/thermistor

Hall Type 1: All Positioners with flying leads, all coils not listed in Hall Type 2
Hall Type 2: Coils 210, 310, 410, with WD7/C
Temp Style 1: All Positioners with flying leads, Coils with WD0, WD1, WD2, WD7
Temp Style 2: Coils with WD3, WD4 options
* The encoder's A+ and A- are reversed at the IPA drive, A/ and A respectively.
** Halls C/B/A are reversed at the IPA, Hall 1/2/3 respectively

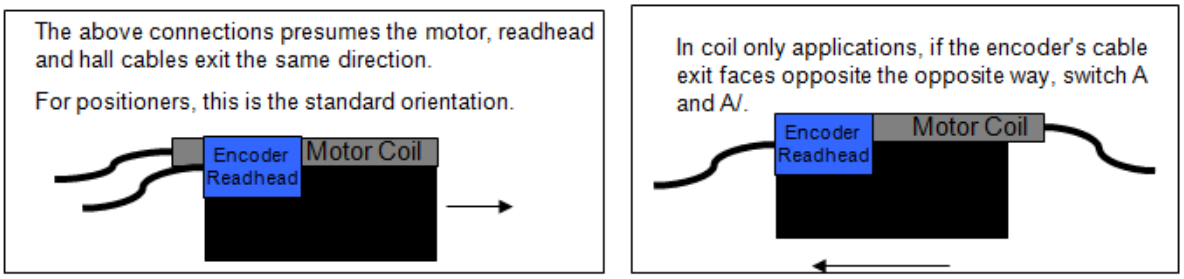

Limit and Home Sensor Connections

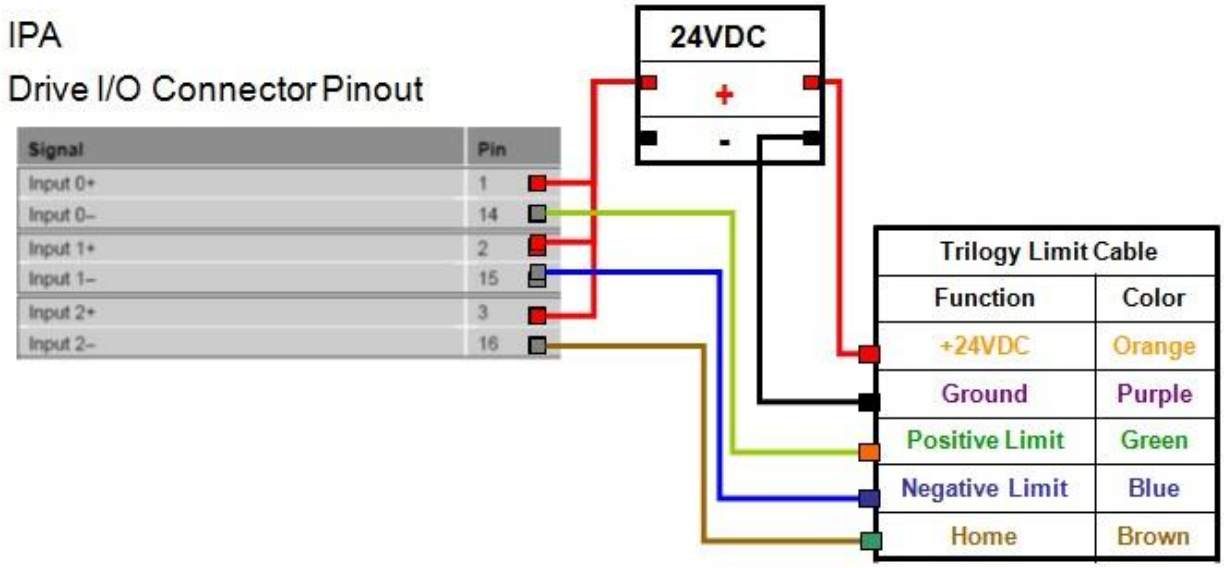

IPA Thermal Model Protection and Power Installation

The IPA uses a thermal model of the motor to estimate the coil temperature rise and is much faster than a thermal switch. If the internal thermal model is to be relied on to protect the motor, do not power off or reset the IPA during use. During an e-stop or jam, keep the amplifier alive using the separate C1 & C2 power, and shut off only L1 & L2 power. **Do not reset the amplifier or power off**. Use the Torque Enable inputs or DRIVE OFF command. Repeatedly resetting the drive can thermally damage the motor. If the temperature switch is to be relied on to protect the motor, the peak current should be reduced to twice the continuous current.

Software Configuration: Select Coil Part Number

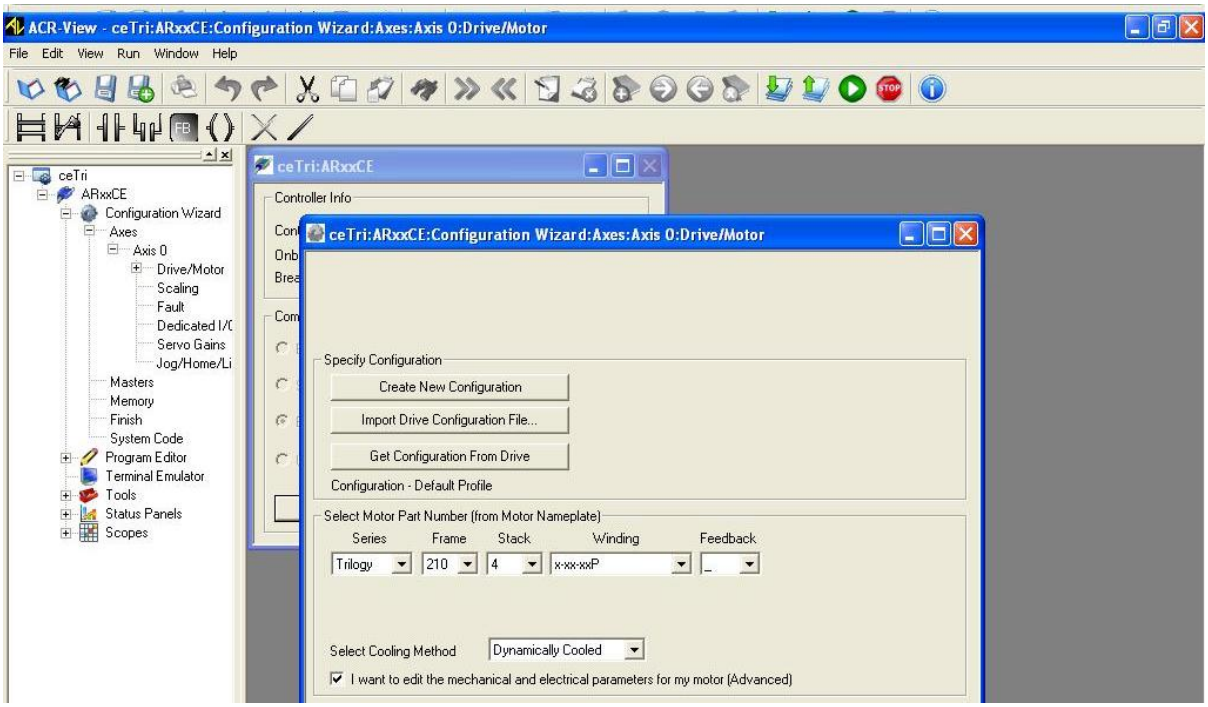

The IForce and Ripped positioner part numbers contain the coil part numbers. Below shows an example of the IForce T2 positioner part number and the information pertinent for IPA configuration.

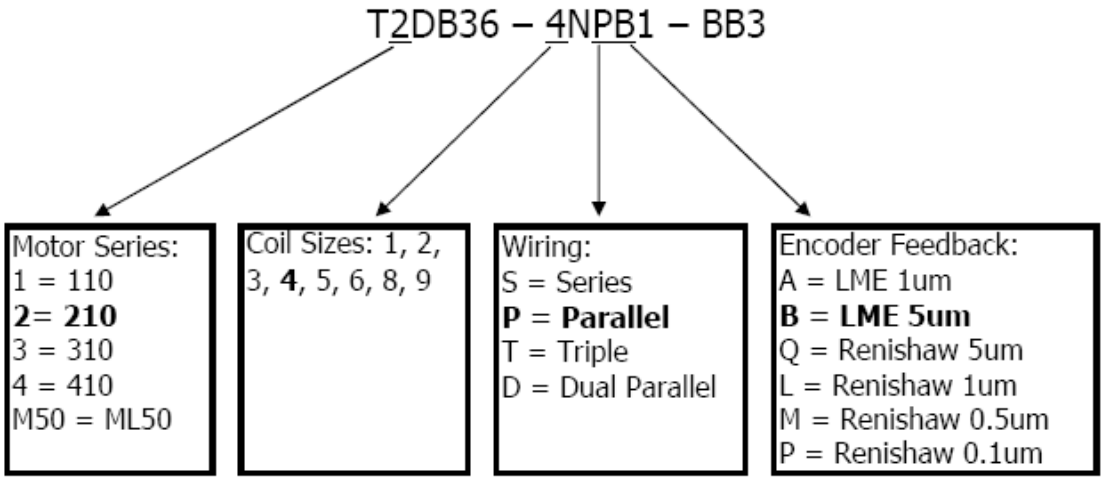

Simple pull-down selections in the ACR-View's Configuration Wizard configure the amplifier based upon the motor part number. Ripped Example:

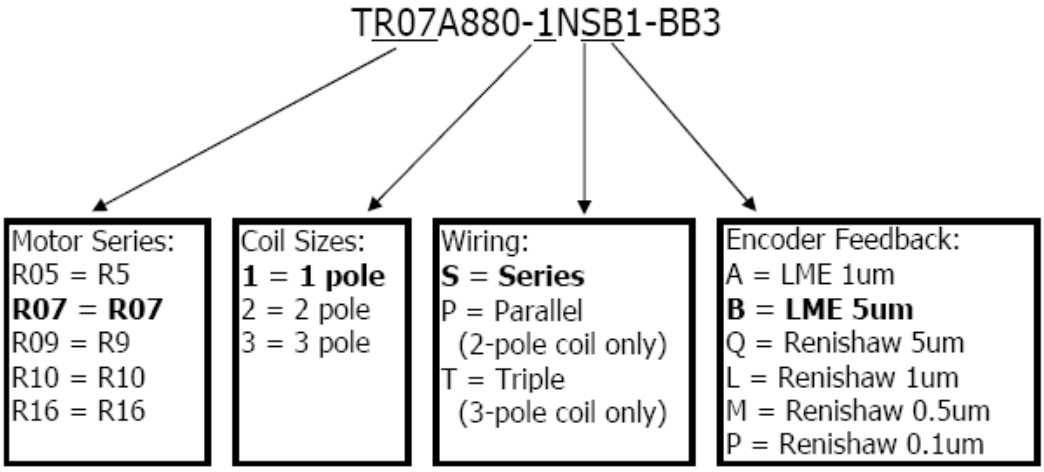

Software Configuration: Set Feedback Resolution

The Encoder's Feedback Resolution sets the number of counts over an electrical cycle for the IPA to commutate. This is in the advanced motor parameters screen in ACR-View. The screen shot below shows the T2 example's feedback resolution setting of 12192 encoder counts per electrical pitch.

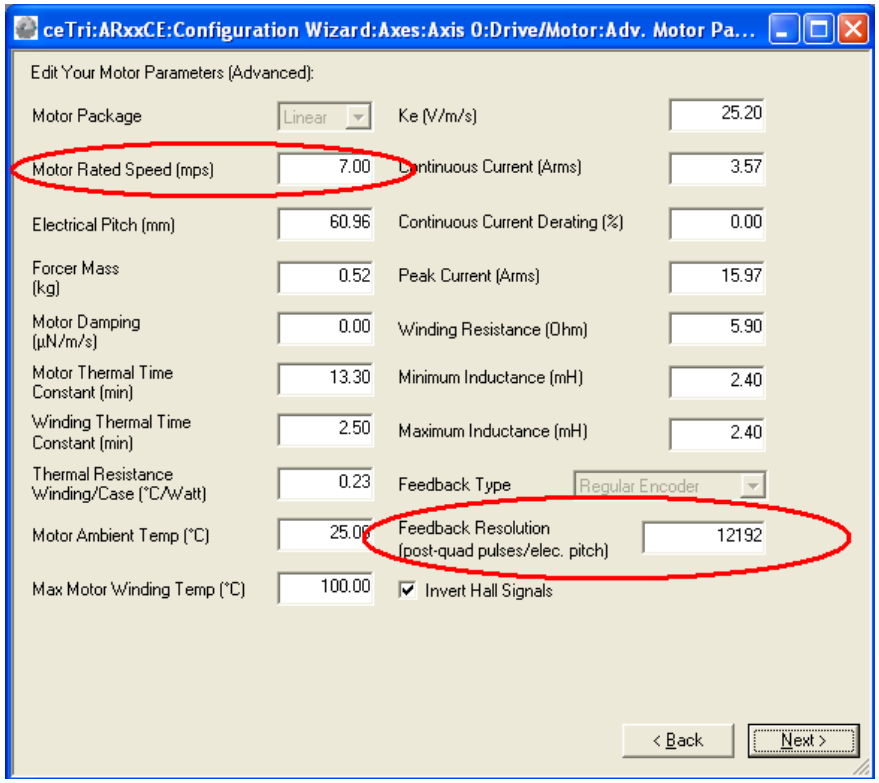

The R7-1 with 5um magnetic would be set to 8000 counts/electrical pitch. Note that the halls are inverted for both IForce and Ripped series coils for IPA configuration.

Standard resolutions are listed below:

Motor Series	5um	1um	0.5um	0.1um
110 / 210 / 310	12192	60960	121920	609600
410	17068	85340	170680	853400
ML50	12000	60000	120000	600000
R7	8000	40000	80000	400000
R10 / R16	12000	60000	120000	600000

This sets the number of encoder counts (post-quad) over one electrical pitch (two magnet widths on the track). This number can be calculated by the electrical pitch divided by the post-quadrature resolution. i.e., 60.96mm / 5um / post-quad pulse = 12192 post-quad pulses / pitch

The motor rated speed can be used to limit maximum speed commanded for higher resolution encoders. Below are the maximum speeds for the standard positioner encoder options.

	B 5um LME	A 1um LME	Q 5um Renishaw	L 1um Renishaw	M 0.5um Renishaw	P 0.1um Renishaw
Max Speed (m/s)	7	2.5	5	5	3	0.4

Software Configuration: Thermal Sensor Type

The thermal sensor type's default setting of "Switch" and "Normally Closed Switch" are correct.

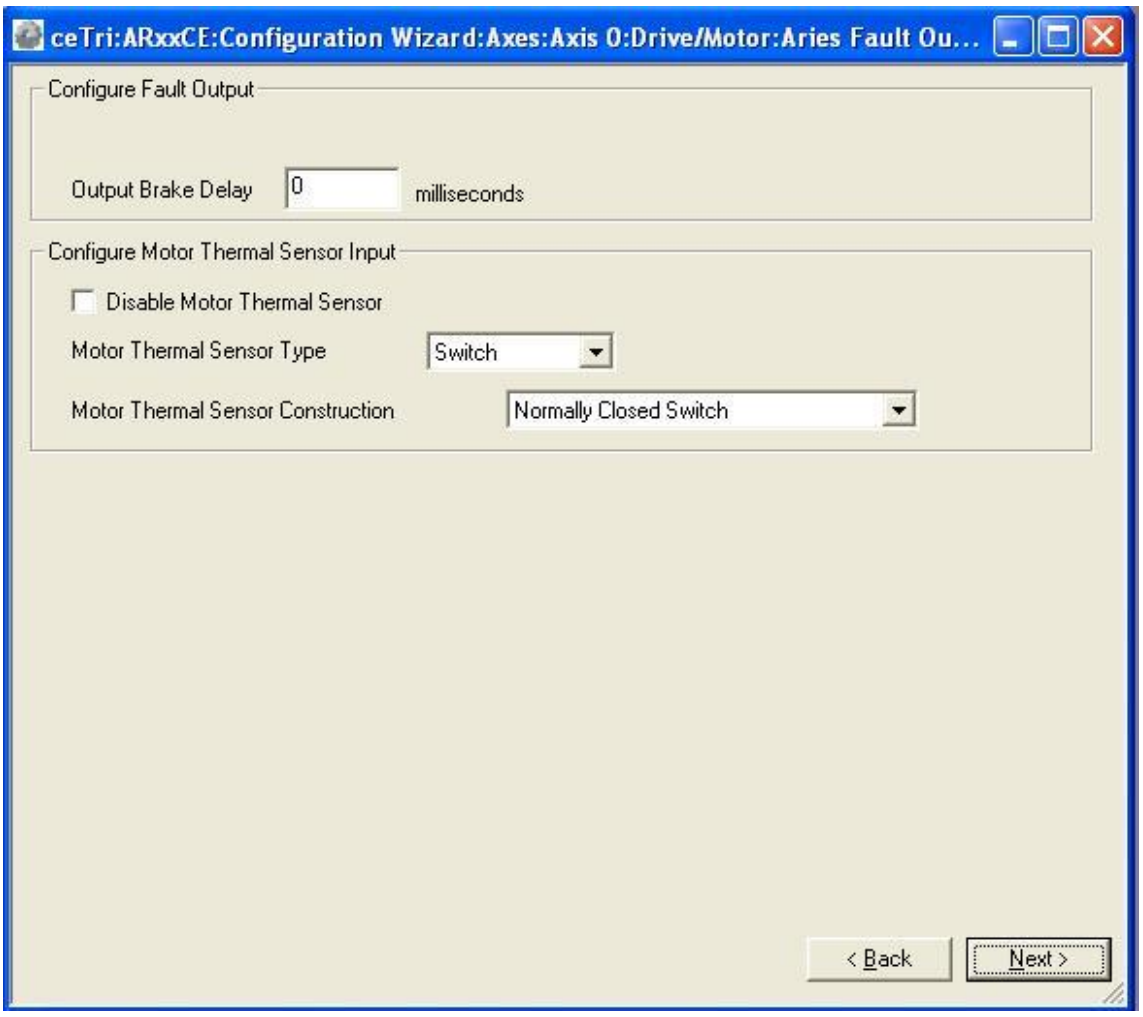

Software Configuration: Position Error & Soft Limits

The (controller) Fault screen allows hardware limit switches to be enabled and the deceleration rate when a limit is detected. Software limits can also be enabled. The Maximum Position Error can also be set. For basic setup, set the maximum position errors to 10mm or 0.5 inch. This can be set to a tighter tolerance after tuning. For IForce and Ripped positioners, the hardware limit sensors are very close to the end of travel (~2.54mm or 0.1in). For this reason, enable the software limits. After homing on power-up or reset, the software limits will limit travel and allow longer distance for the motor to decelerate. To approximate the distance during deceleration:

$$D\ decel = 0.5\ (Vmax)^2 * m / F$$

The distance covered during the deceleration is one half of the maximum velocity during operation squared times the total moving mass (include the coil mass) divided by the peak force of the motor.

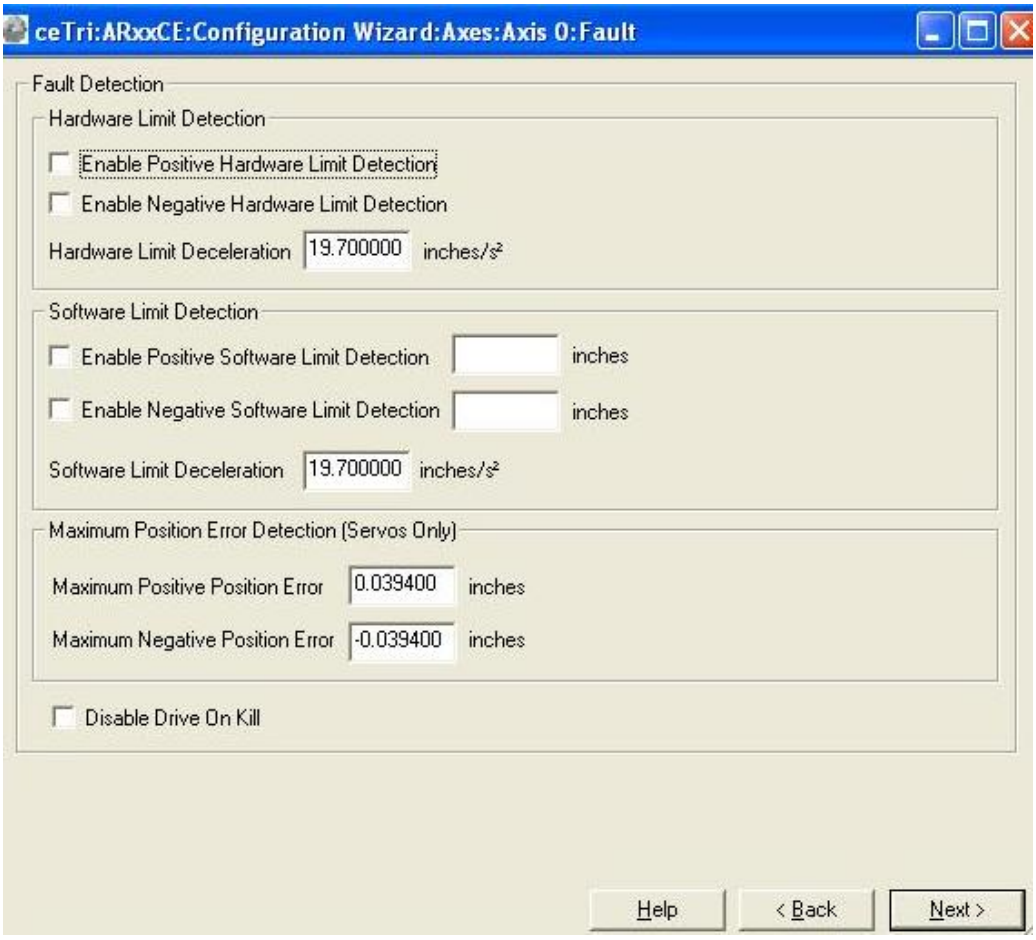

Software Configuration: End of Travel (EOT) Limits & Home

Select the on-board input for positive limit. The Negative Limit will be the next input and the home the following. Note that for IForce and Ripped positioners, the home sensors are normally closed; change this screen's default from Normally Open (NO) to Normally Closed (NC).

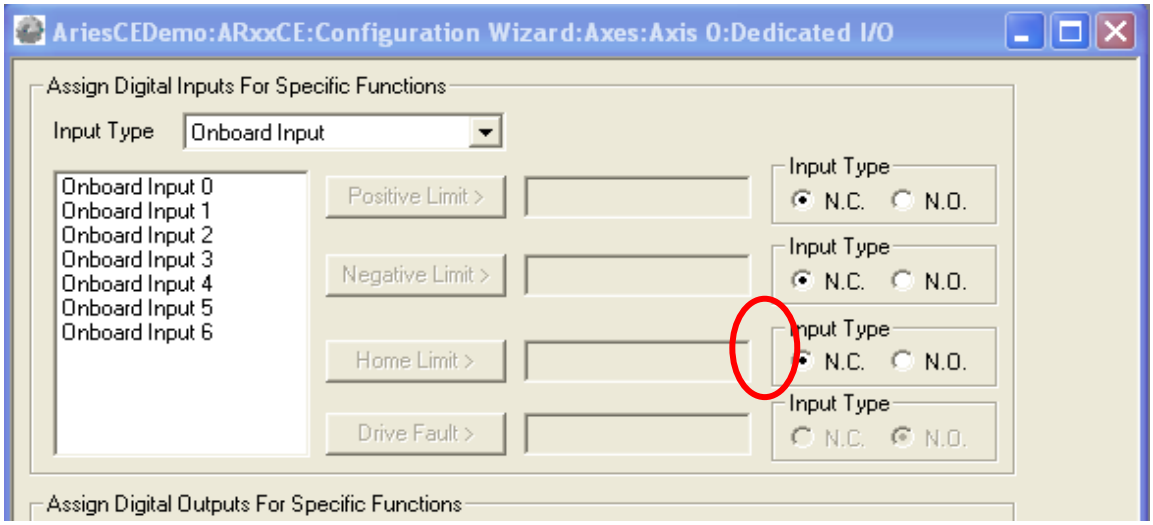

APPENDIX C
IPA with Parker Mechanics

IPA with Parker Mechanics

Parker Mechanics are offered with a wide array of choices for limits and home sensors. Any of these combinations can be used with the IPA. The IPA can use either NPN (sinking) or PNP (sourcing) style sensors ranging from 5-24 VDC input levels.

Here are some general notes:

- The IPA includes 7 general purpose inputs, any of which can be configured for limits and home function.
- Limits and home must be selected on 3 consecutive inputs, ordered as positive, negative and home.
- Normally Open (NO) or Normally Closed (NC) activation level can be configured for each individual input.
- Input voltage must be supplied externally.
- Inputs are accessed via the Drive I/O 25-pin connector. The VM25 breakout module offers a convenient way to wire the inputs.

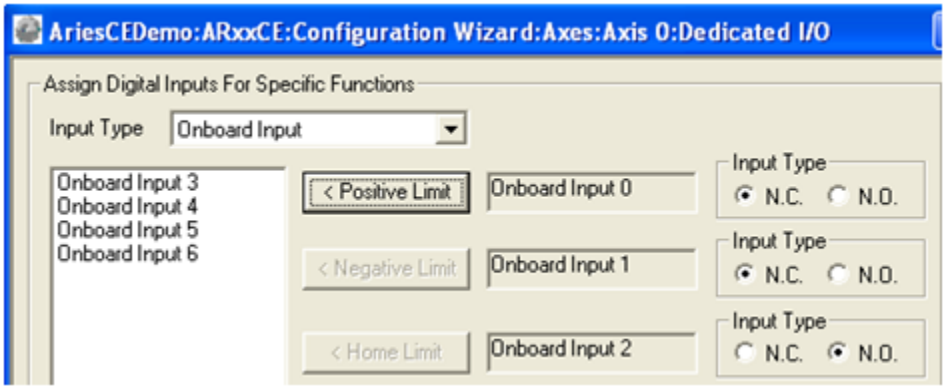

APPENDIX C

The IPA allows users to program moves in predefined units of measure. Simply enter the relevant parameters in ACR-View and the correct scaling factor will be calculated. Parker mechanics are offered in a wide range of ballscrew leads, transport belt sizes and gearhead ratios. The order codes and the actual leads are listed to the right for reference when using ACR-View.

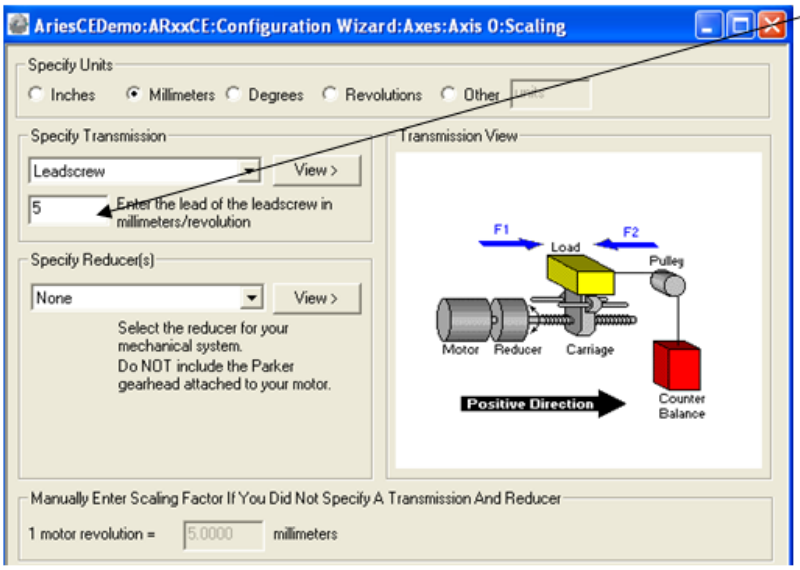

Series	Order Code	Screw Lead
HD	D02	5mm
	D03	10mm
	D04	20mm
	D07	40mm
XR, XE	D2	5mm
	D3	10mm
	D4	20mm
	D5	25mm
	D6	32mm
	D9	2mm
	D31	1mm
	D32	2mm
	D33	5mm
	D34	0.10 inch
	D35	0.10 inch
ET	A04	0.250 in
	A05	0.200 in
	A08	0.125 in
	B01	1.000 in
	B02	0.500 in
	B04	0.250 in
	B05	0.200 in
	B08	0.125 in
	B53	1.875 in
	M05	5mm
	M10	10mm
	M20	20mm
	M50	50mm

Series	Order Code	Distance per rev
LCR	BLT	44mm
	30	58mm
	LN02	2mm
	LN10	10mm
ETH	M05	5mm
	M10	10mm
	M16	16mm
	M20	20mm
	M32	32mm

OSPE Series	Order Code	Distance per rev
BHD	20	125mm
	25	180mm
	32	240mm
	50	350mm
B	25	60mm
	32	60mm
	50	100mm
SB	25..3	5mm
	25..4	10mm
	32..4	10mm
	25..5	25mm
	32..5	25mm
	50..5	25mm
ST	25	4mm
	32	4mm
	50	6mm
BV	20	108mm
	25	160mm

The above positioners and actuators do not include the optional gearbox reduction.

Parker Gearhead Gear Ratios

Series	Order Code	Gear Ratio (exact)
PS PX PV RS RX PG/RA NE/NR	001	1:1
	003	3:1
	004	4:1
	005	5:1
	007	7:1
	008	8:1
	010	10:1
	012	12:1
	015	15:1
	016	16:1
	020	20:1
	025	25:1
	030	30:1
	035	35:1
	040	40:1
	050	50:1
	070	70:1
	100	100:1

Not all ratios are offered as standard in all models.

Example: OSPE 32B with PV60TA-010 is 60mm/rev of the transport belt and the gearhead is a 10: ratio. Within the software, as the transport belt is in travel per rev and not pulley diameter use Transmission Type: Leadscrew to input 60mm and Gearbox input of 10, denominator of 1.

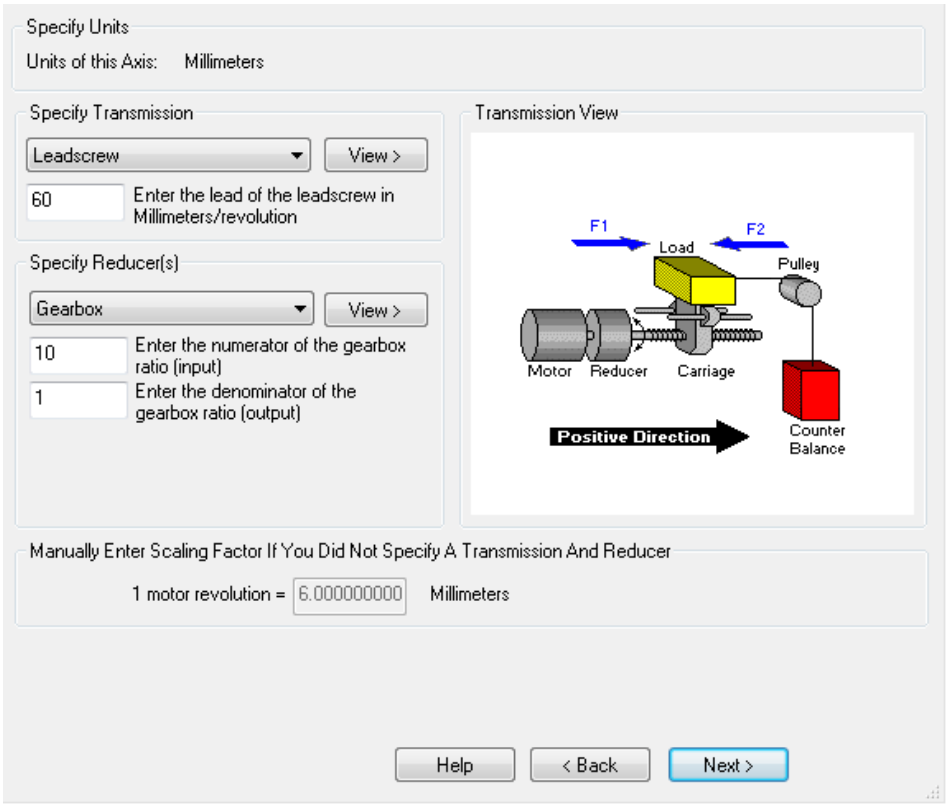

For inches, set the gearbox ratio to the ratio times 254 and set the denominator to 10.

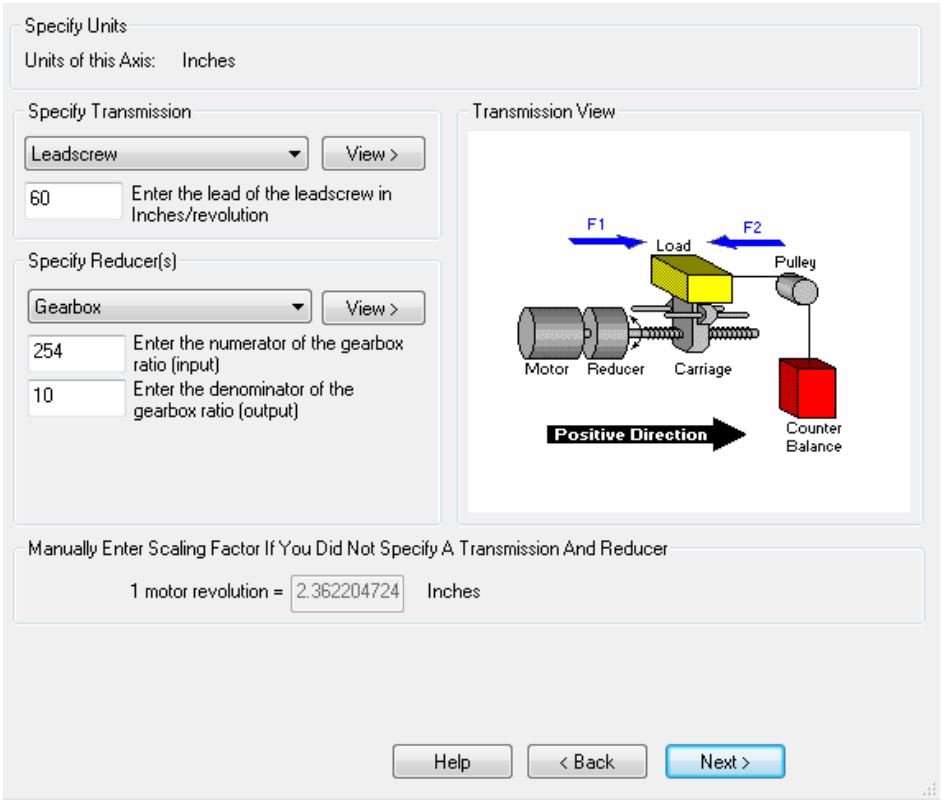

Limit/Home Sensor Wiring

IForce and Ripped Positioners with Connector Box Option

400LXR Series Positioners



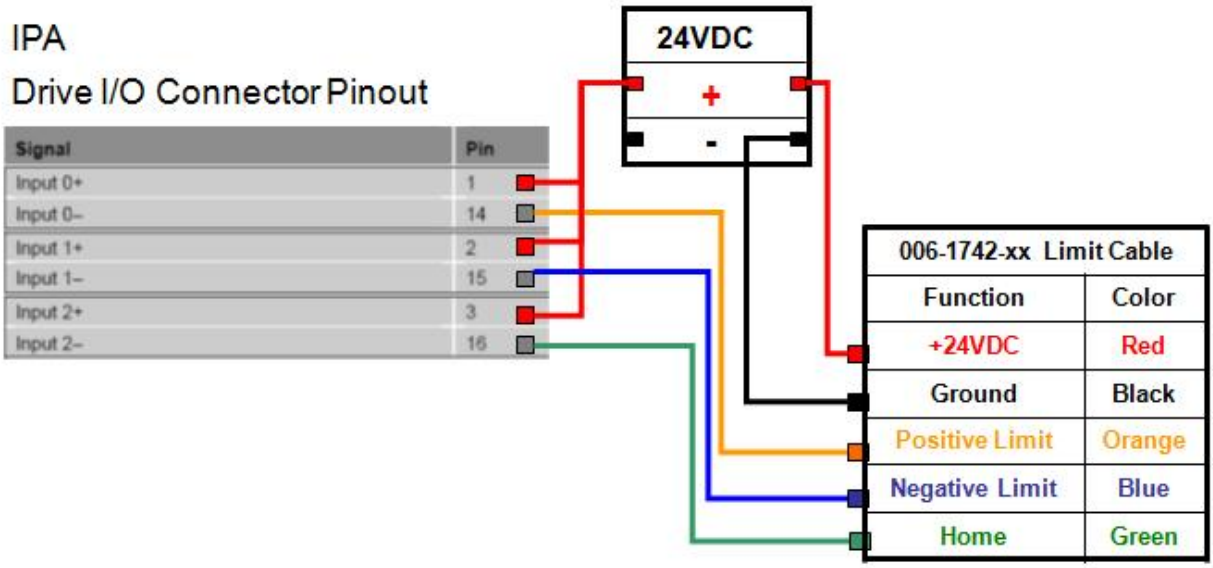

Note: The IForce and Ripped positioned home sensor is Normally Closed (NC).

Applies to the following Parker Stages:

- 402/403/404XE ...L12H11
- 404/406XR…L12H11
- 404/406/412LXR….**H3 L2**



IPA

Drive I/O Connector Pinout

Signal	Pin
Input 0+	1
Input 0–	14
Input 1+	2
Input 1–	15
Input 2+	3
Input 2–	16

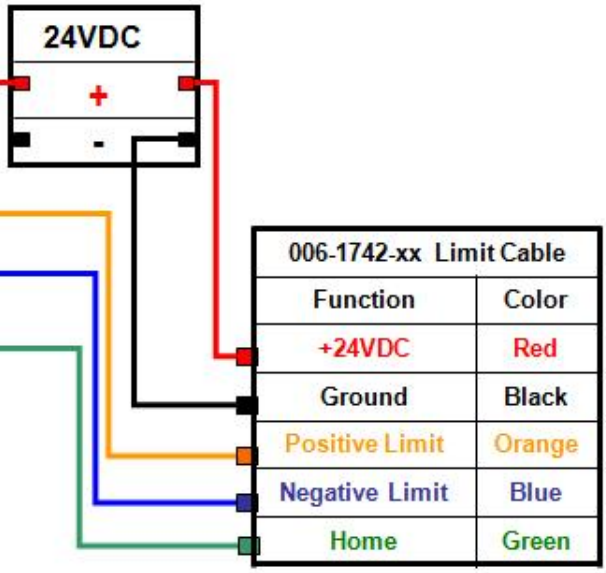

Applies to the following Parker Stages:

- 404XE…H3L2
- 404XE…H7L6
- 401/402/404/406/412XR…H3L2
- 401/402/404/406/412XR…**H7L6**

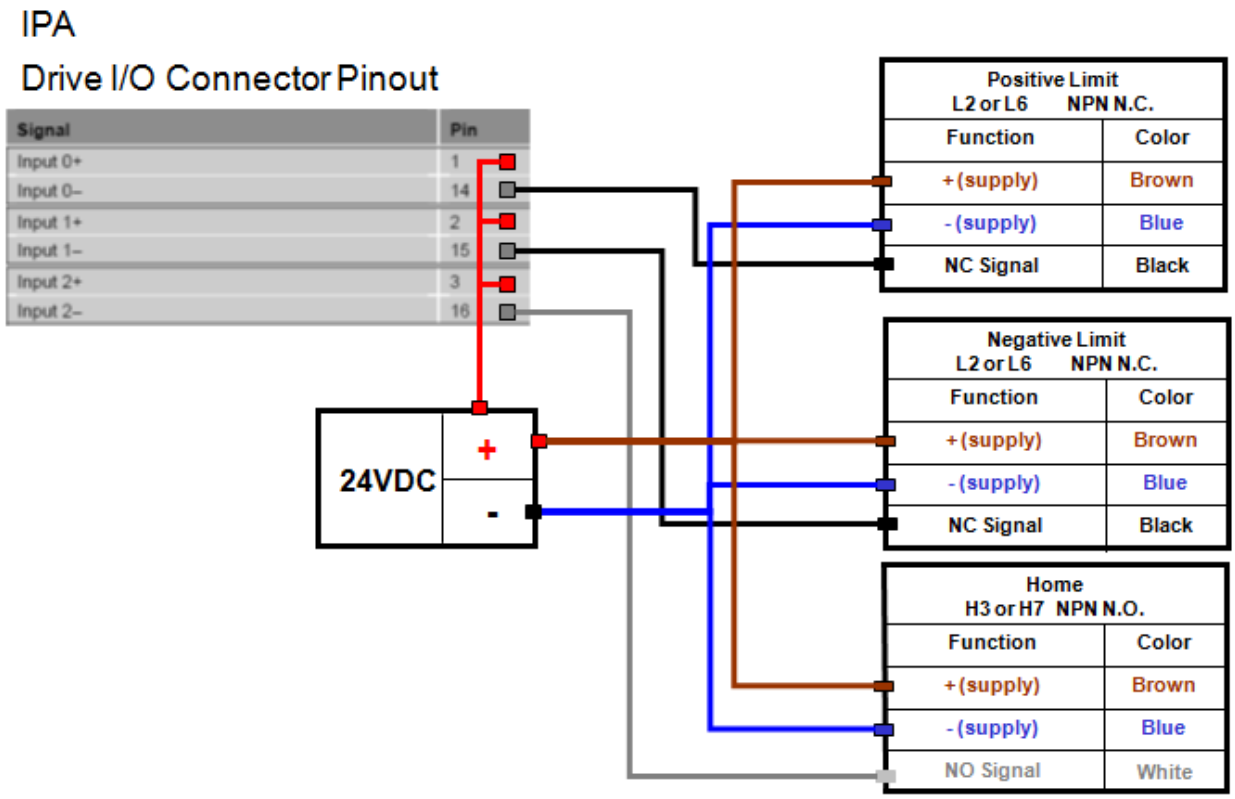

Applies to the following Parker Stages:

- 404XE…H5L4
- 404XE…H9L8
- 401/402/404/406/412XR…H5L4
- 401/402/404/406/412XR…**H9L8**

IPA

Drive I/O Connector Pinout

Signal	Pin
Input 0+	1
Input 0–	14
Input 1+	2
Input 1–	15
Input 2+	3
Input 2–	16

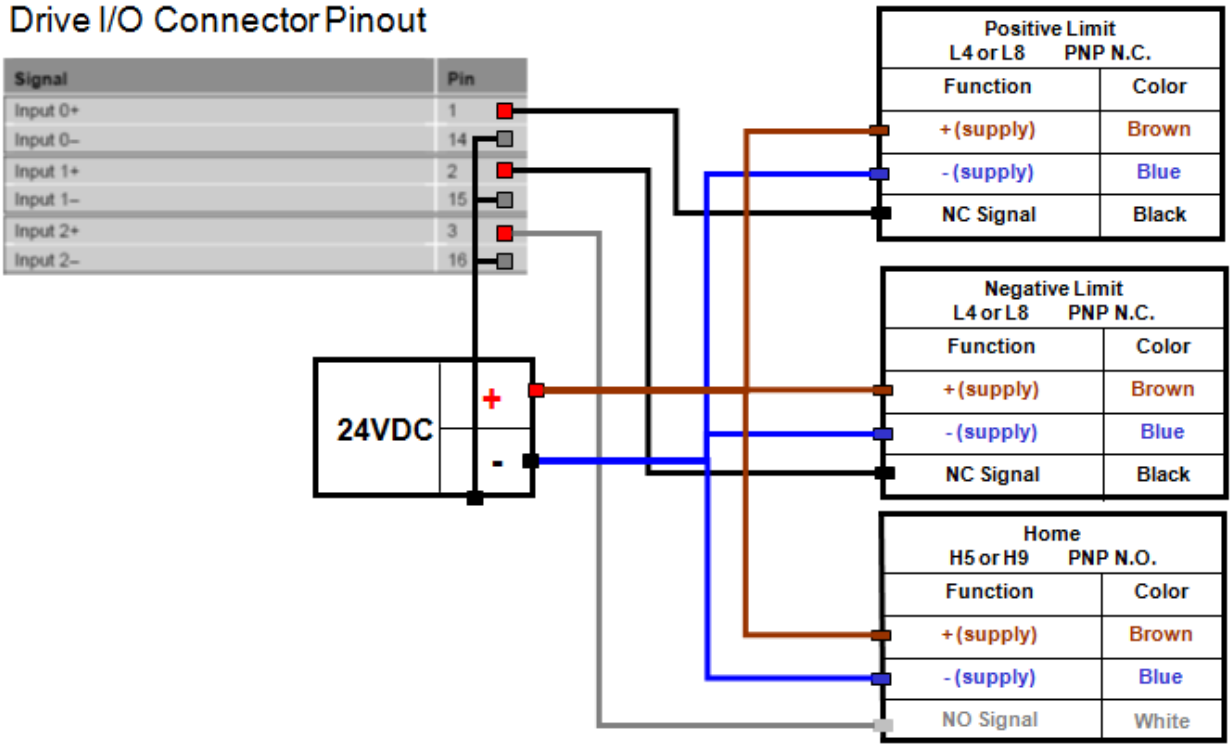

Applies to the following Parker Stages:

- 402/403XE…H3L2
- HD085/125/185…**LH2**

IPA

Drive I/O Connector Pinout

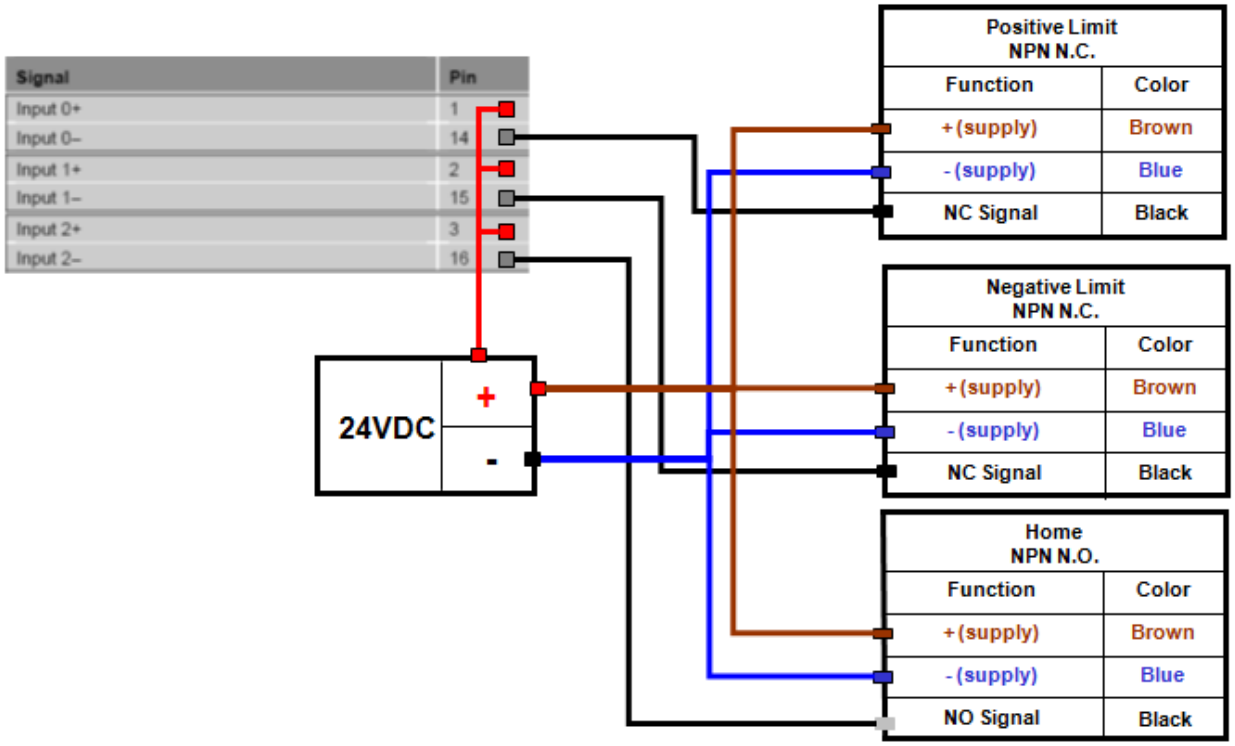

Applies to the following Parker Stages/Actuators:

ET32/50/80/100/125 (Sensors (NPN) ordered separately)

Hall Effect Sensors

Part No.	Type	LED Color	Logic	Cable/ Connector
SMH-1P	N.O.	Green	PNP	1.5m black with leads
SMH-1N	N.O.	Red	NPN	
SMC-1P	N.C.	Yellow	PNP	
SMC-1N	N.C.	White/Red	NPN	
SMH-1PC	N.O.	Green	PNP	150mm black with connector*
SMH-1NC	N.O.	Red	NPN	
SMC-1PC	N.C.	Yellow	PNP	
SMC-1NC	N.C.	White/Red	NPN	

ETH, OSPE, LCR, LP28, HD (P8S Global Sensors (NPN) ordered separately)

See page 127 for P8S Global sensors and page 128 for P8S Mini-Global sensors.

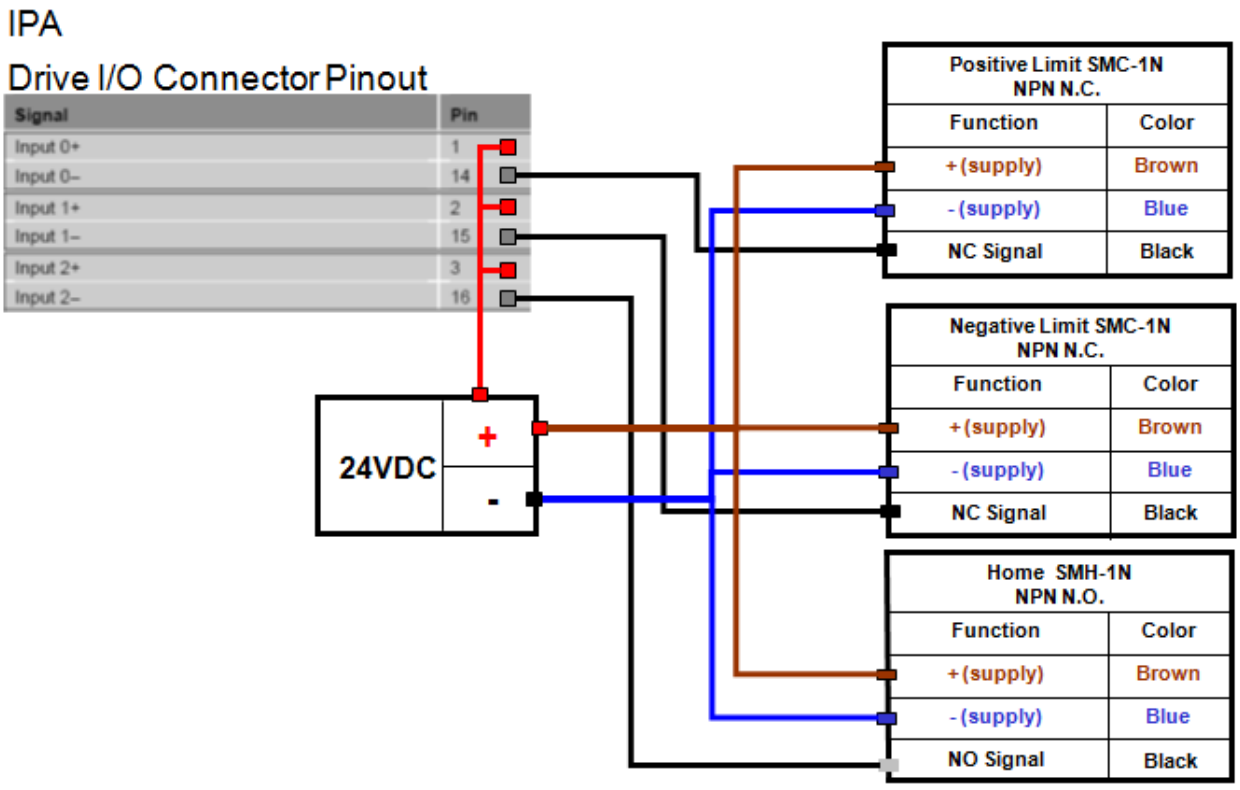

ET32/50/80/100/125 PNP Sensors ordered separately

Hall Effect Sensors

Part No.	Type	LED Color	Logic	Cable/ Connector
SMH-1P	N.O.	Green	PNP	1.5m black with leads
SMH-1N	N.O.	Red	NPN	
SMC-1P	N.C.	Yellow	PNP	
SMC-1N	N.C.	White/Red	NPN	
SMH-1PC	N.O.	Green	PNP	150mm black with connector*
SMH-1NC	N.O.	Red	NPN	
SMC-1PC	N.C.	Yellow	PNP	
SMC-1NC	N.C.	White/Red	NPN	

ETH, OSPE, LCR, HD P8S Global Sensors (PNP) ordered separately

See page 127 for P8S Global sensors and page 128 for P8S Mini-Global sensors.

IPA

Drive I/O Connector Pinout

Signal	Pin
Input 0+	1
Input 0–	14
Input 1+	2
Input 1–	15
Input 2+	3
Input 2–	16

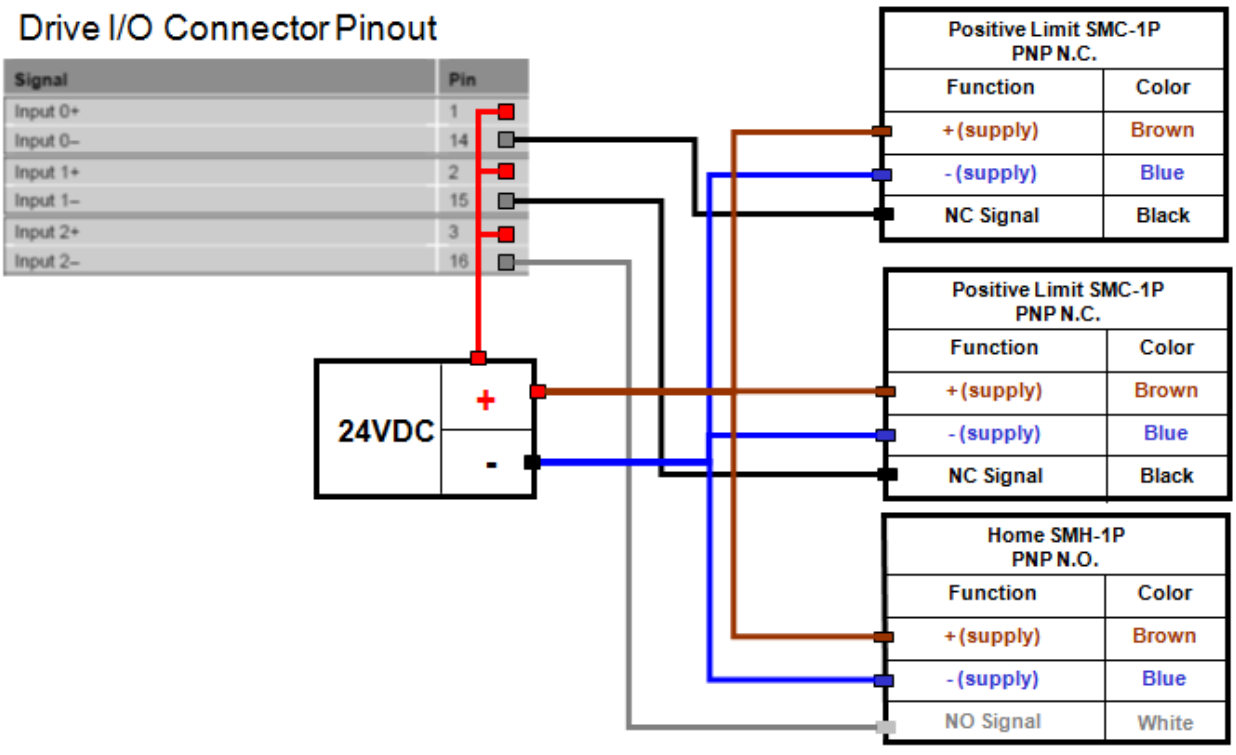

P8S Global Drop-In Solid State Sensors

Type	Electronic
Output Function	Normally Open
Switching Output	PNP/NPN
Operating Voltage	10 - 30VDC
Continuous Current	200 mA max.*
Response Sensitivity	2.8 mT min.
Switching Frequency	5 KHz
Power Consumption	10 mA max.
Voltage Drop	2 VDC max.
Ripple	10% of Operating Voltage
Hysteresis	1.5 mm max.
Repeatability	0.1 mm max.
EMC	EN 60 947-5-2
Short-circuit Protection	Yes
Power-up Pulse Suppression	Yes
Reverse Polarity Protection	Yes
Enclosure Rating	IP 67
Shock and Vibration Stress	30g, 11 ms, 10 to 55 Hz, 1 mm
Operating Temperature Range	-25°C to +75°C (-13°F to 167°F)
Housing Material	PA 12, Black
Connector Cable	PVC
Connector	PUR cable w/8 or 12 mm conn.

Flying lead or 8 mm connector (shown)

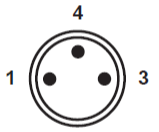

Pin	Wire	Function
1	Brown	Operating voltage (+VDC)
4	Black	Output signal (N.O.)
3	Blue	-VDC

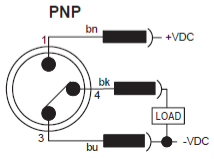

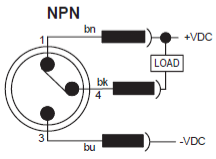

-XX	PART#	NPN/PNP	N.O. / N.C.	CABLE
003-3743-01	P8S-GNSHX*	NPN	N.O.	0.2M with M8
	P8S-GNCHX	NPN	N.O.	0.2M with M8
003-3743-02	P8S-GPSHX*	PNP	N.O.	0.2M with M8
	P8S-GPCHX	PNP	N.O.	0.2M with M8
003-3743-03	P8S-GMSHX*	NPN	N.C.	0.2M with M8
	P8S-GMCHX	NPN	N.C.	0.2M with M8
003-3743-04	P8S-GQSHX*	PNP	N.C.	0.2M with M8
	P8S-GQCHX	PNP	N.C.	0.2M with M8
003-3743-05	P8S-GNFLX*	NPN	N.O.	3.0M FLY LEADS
	P8S-GNFAX	NPN	N.O.	3.0M FLY LEADS
003-3743-06	P8S-GPFLX*	PNP	N.O.	3.0M FLY LEADS
	P8S-GPFAX	PNP	N.O.	3.0M FLY LEADS
003-3743-07	P8S-GMFLX*	NPN	N.C.	3.0M FLY LEADS
	P8S-GMFAX	NPN	N.C.	3.0M FLY LEADS
003-3743-08	P8S-GQFLX*	PNP	N.C.	3.0M FLY LEADS
	P8S-GQFAX	PNP	N.C.	3.0M FLY LEADS
003-3743-13	P8S-TMA0X	N/A	N/A	MOUNTING BRACKET

*retired version of sensor, no longer available for sale

PART#	Description
003-2918-01	Extension Cable, 5m cable, M8 connector, flying lead, PVC jacket
003-2918-02	Extension Cable, 10m cable, M8 connector, flying lead, PVC jacket
003-2918-03	Extension Cable, 20m cable, M8 connector, flying lead, PVC jacket

P8S Mini-Global Drop-In Solid State Sensors

OPERATING VOLTAGE..... 10-30VDC
CONTINUOUS CURRENT..... <70mA
RESPONSE SENSITIVITY..... <48 GAUSS
SWITCHING FREQUENCY..... 1000HZ
POWER CONSUMPTION.....<8mA WITHOUT LOAD
VOLTAGE DROP .....<2.5 VDC
RIPPLE.....10% OPERATING VOLTAGE
HYSTERESIS.....<15 GAUSS
REPEATABILITLITY.....+/- 0.1MM
EMC.....EN 60 947-5-2
SHORT CIRCUIT PROTECTION.....YES
POWER UP PULSE SUPPRESSION.....NO
REVERSE POLARITY PROTECTION....YES
ENCLOSURE RATING.....IP67
OPERATING TEMP.....-25°C TO +75°C
CONNECTOR CABLE.....PUR 3 X 0.09mm^2
CONNECTOR.....PUR CABLE W 8MM CONNECTOR



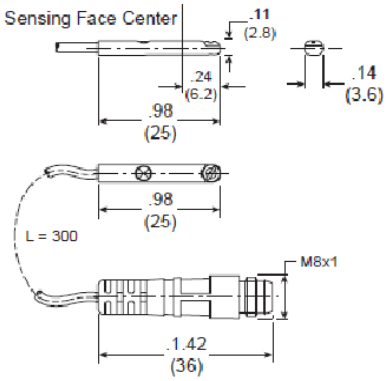

Wiring connection



Pin	Wire	Function
1	Brown	+VDC
4	Black	NO
3	Blue	- VDC

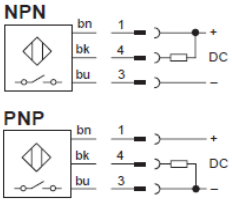

-XX	PART#	NPN/PNP	N.O. / N.C.	CABLE
003-4475-01	P8S-MQFLX	PNP	N.C.	3.0M FLY LEADS
	P8S-MQFLY	PNP	N.C.	3.0M FLY LEADS
003-4475-02	P8S-MQSHX	PNP	N.C.	0.3M with M8
	P8S-MQCHY	PNP	N.C.	0.3M with M8
003-4475-03	P8S-MMFLX	NPN	N.C.	3.0M FLY LEADS
	P8S-MMFLY	NPN	N.C.	3.0M FLY LEADS
003-4475-04	P8S-MMSHX	NPN	N.C.	0.3M with M8
	P8S-MMCHY	NPN	N.C.	0.3M with M8
003-4475-05	P8S-MPFLX	PNP	N.O.	3.0M FLY LEADS
	P8S-MPFLY	PNP	N.O.	3.0M FLY LEADS
003-4475-06	P8S-MPSHX	PNP	N.O.	0.3M with M8
	P8S-MPCHY	PNP	N.O.	0.3M with M8
003-4475-07	P8S-MNFLX	NPN	N.O.	3.0M FLY LEADS
	P8S-MNFLY	NPN	N.O.	3.0M FLY LEADS
003-4475-08	P8S-MNSHX	NPN	N.O.	0.3M with M8
	P8S-MNCHY	NPN	N.O.	0.3M with M8