COGNEX®

DataMan™ 100

Quick Reference Guide

DATAMAN
ID Readers

1 Getting Started — DataMan 100 Systems • DataMan 100 Accessories • Product Overview • Mounting — ***Page 4***

2 Setting up your DataMan — Install DataMan Software • Reading your First Code • Setting the Focus Position • Field of View • Reading Distances — ***Page 8***

3 Connect your DataMan — USB Connections • RS-232 Connections • Wiring with the Basic I/O Module • Wiring the Expansion I/O Module — ***Page 14***

4 Using your DataMan — DataMan 100 Trigger types • Trigger Modes • Training • Training Feedback • Start the Setup Tool • Use the Setup Tool General Toolbar — ***Page 22***

5 Reference Information — DataMan 100 Specifications • DataMan 100 Cable Pinout • Digital Input Wiring Diagrams • Digital Output Wiring Diagrams • Multi-Port Connections • SensorView Teach Pendant Support • RS-232 Parameter Codes — ***Page 30***

DataMan 100 Systems

	High-Speed Part Moving Applications	1DMax™ — Best-In-Class 1D Reading	IDQuick™ — High-Speed 2D Reading	IDMax™ — Difficult DPM Reading
DataMan 100S* (DMR-200S-*xx*)		√	√	
DataMan 100QL** (DMR-100QL-xx)	√	√		
DataMan 100Q (DMR-100Q-*xx*)	√	√	√	
DataMan 100X (DMR-100X-*xx*)	√	√	√	√

*S: Maximum decode rate of 5 codes / sec
**QL: 1D / Stacked symbols only

Basic Accessory Kit (DM100-BAK-000)


CD-ROM
(Setup Tool and Drivers)
(206-6400-340)


Quick Reference Guide
(590-7110)


Mounting bracket
(DM100-UBRK-000)


Pivot Mounting Bracket
(DM100-PIVOTM-00)

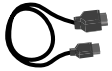
USB adapter cable
with power tap
(DM100-USB-000)


RS-232 adapter cable
with power tap
(DM100-RS232-000)

DataMan 100 Accessories


DataMan Basic I/O Module
(DM100-IOBOX-000)


RS-232/USB adapter for
Expansion I/O Module
(DM100-PATCH-000)


DataMan Expansion I/O Module
(DM100-1400-000)


Power supply
(DM100-PWR-000)


5-meter extension cable
(DM100-EXTCBL-000)


SensorView Teach
Pendent
(SV-350-001)


Harsh Environment Enclosure
(DM100-HENCL-00)


SHD Lens Kit
(read high-density symbols)
(DM100-SHD-000)


C-Mount Lens Adapter
(DM100-CMNT-000)


Red lens cover (ESD-safe)
(DM100-RLC-000)


Clear lens cover (ESD-safe)
(DM100-CLC-000)


Direct part mark illumination kit
(DM100-DMPL-000)

Product Overview

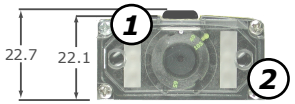

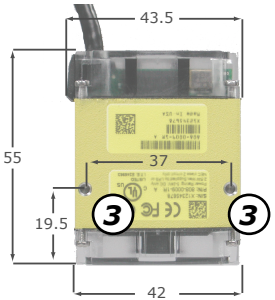

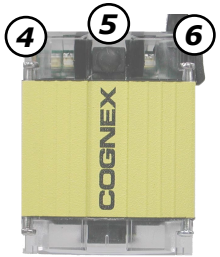

1. **Illumination LED**
2. **Aiming LED**
3. **Mounting holes** (M3 x 3.5)
4. **Status LED**
   - Red: no read
   - Green: read
5. **Pushbutton**
   - Push to read
   - Push and hold 3 seconds to train
   - Use Setup tool to program additional button functions
6. **System LED**
   - Green: Trained
   - Yellow: Untrained
   - Steady: System OK
   - Slow blink: Connected to Setup tool
   - Fast blink: Data transfer

Mounting

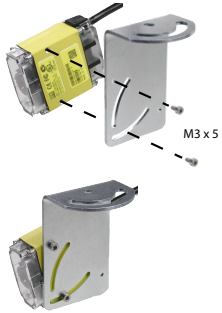

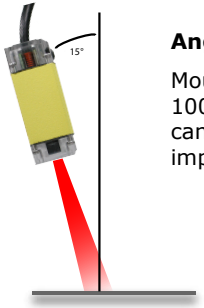

Angled Mounting

Mounting the DataMan 100 at a slight angle (15°) can reduce reflections and improve reader performance.

Use a DataMan 100 Ground Isolator to prevent mounting your DataMan 100 to conductive material that can provide an electrical path to ground, which may cause data loss or unreliable operation.

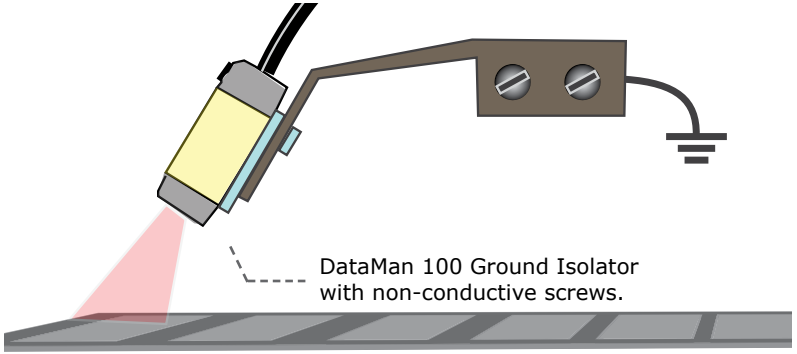

Install DataMan Software

1. Make sure your PC meets the requirements listed in the DataMan Release Notes.
2. Insert the DataMan CD-ROM and follow the on-screen prompts.
3. Connect the DataMan 100 to your PC following the instructions on pages 14-21.
4. Choose **Start->Programs->Cognex->DataMan Setup Tool->Setup Tool** to launch the Setup Tool.
5. Click **Refresh** to update the list of connected devices.
6. Select a **COM port** that lists a DataMan 100 (**DM100**) and click **Connect**.

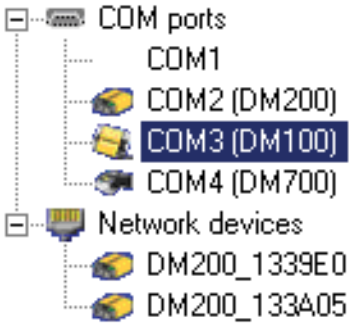

Reading your First Code

The DataMan 100 is pre-configured for Manual triggering using the trigger button and symbology discrimination. To verify that your reader is operational, click on the **Results Display** pane in the Setup Tool, place a symbol in front of the reader, and press the black trigger button. The Setup Tool should display the image and the decoded string.

Troubleshooting

If you are unable to read a valid symbol, try any of the following:

- Scan the correct connection code on page 15 or 17.
- If you are using your PC's USB to power the DataMan 100, make sure that your PC's USB port can supply enough power (2.5W peak). Connect the DataMan 100 power supply (DM100-PWR-000) to the USB adapter cable if needed.
- If you are using a direct USB connection, make sure that the USB adapter cable is connected to the DataMan 100 before you connect the USB cable to your PC. Connecting or disconnecting the 15-pin plug from the USB cable while the PC is connected may cause a USB driver crash on the PC.
- If you are using a USB connection with the Basic I/O module, make sure that the DataMan 100 is connected to the I/O module before you connect the I/O module to your PC. Connecting or disconnecting the 15-pin plug from the I/O module while the PC is connected may cause a USB driver crash on the PC.

Setting the Focus Position

DataMan can operate in one of three distance ranges. To set the focus position:

1 Remove screws and lens cover.

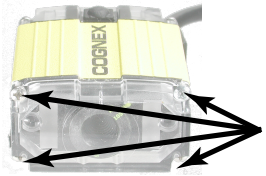

2 Set focus position.

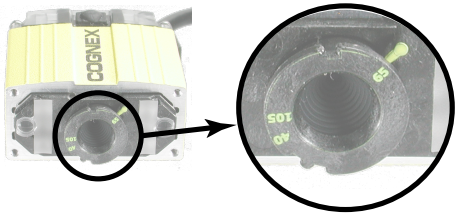

3 Replace lens cover and screws.



Tighten screws in order shown. Maximum torque for the cover screws is 9 N-cm (0.8 pound-inch).

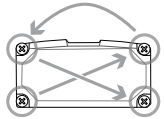

Field of View

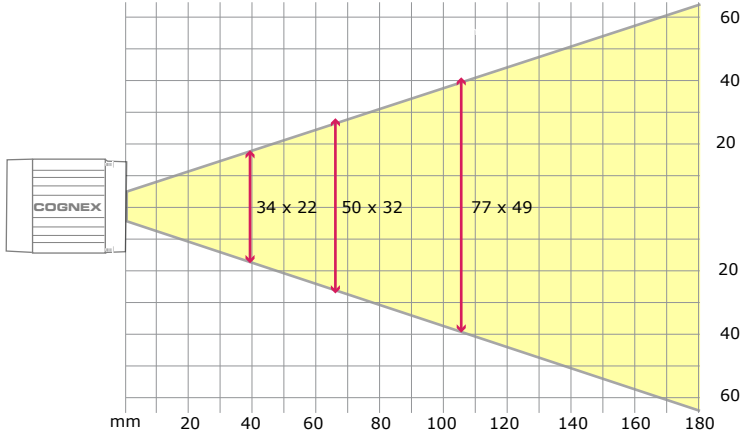

This chart shows the horizontal field of view for the DataMan 100 and DataMan 100-LA at a range of working distances.

The horizontal and vertical field of view is shown for working distances of 40mm, 65mm and 105mm.

Reading Distances

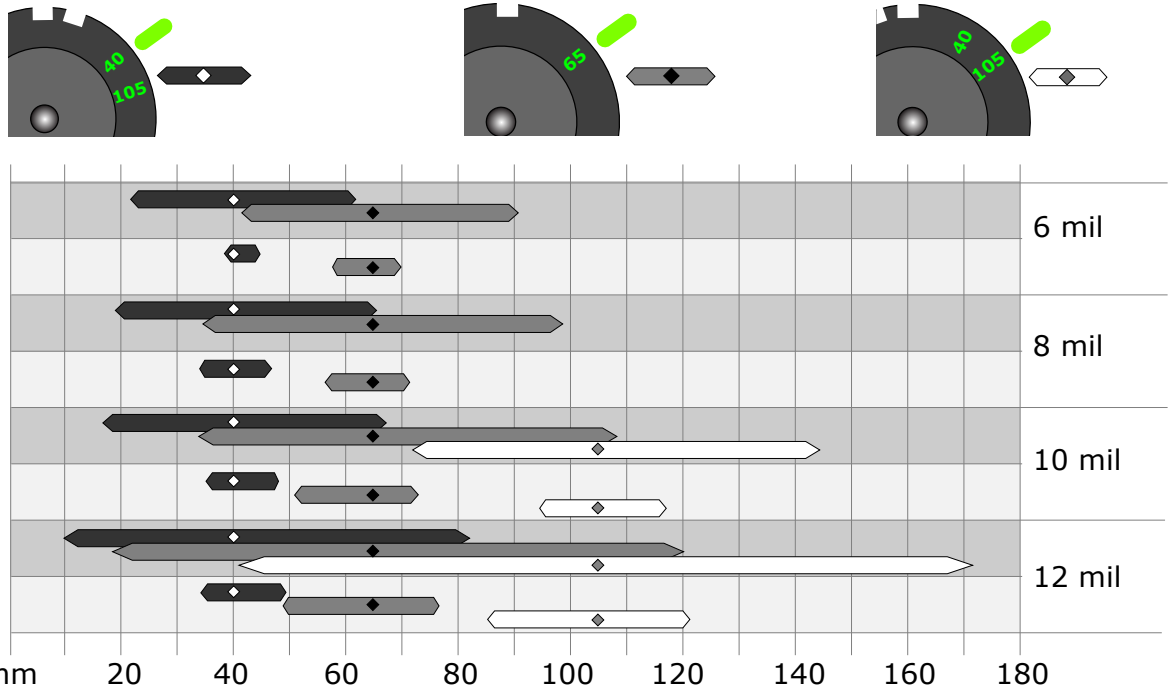

DataMan 100

DataMan 100-LA

This chart shows the supported range of reading distances for four code sizes (6, 8, 10, and 12 mil) at each of the three focus positions (40mm, 65mm, and 105mm).

The working distances for both the standard DataMan 100 and the DataMan 100-LA (large-aperture) are shown.

USB Connections

When connected to a PC over USB, the DataMan 100 appears as either a COM port or as a standard USB keyboard. You control the connection type by scanning the appropriate connection code.

1 Make the connection by...

...connecting directly to the PC:

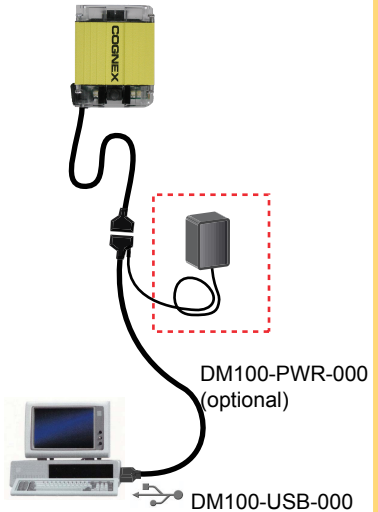

...connecting to the PC through basic I/O module:

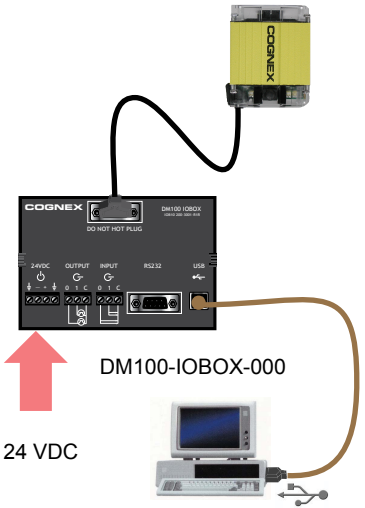

...connecting to the PC through expanded I/O module:

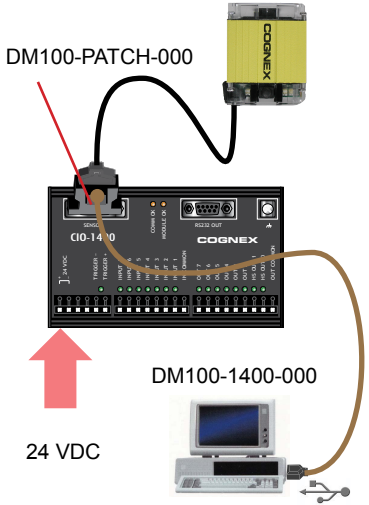

2 Scan the connection code

USB Serial

NOTE: DataMan PC software must be installed for this connection type!

USB Keyboard

NOTE: You cannot use the Setup tool with this connection type.

RS-232 Connections

You can connect the DataMan 100 to a PC or other device over a standard RS-232 serial connection. **NOTE:** You must supply external power to use this connection type.

1 Make the connection by...

...connecting directly to the PC:

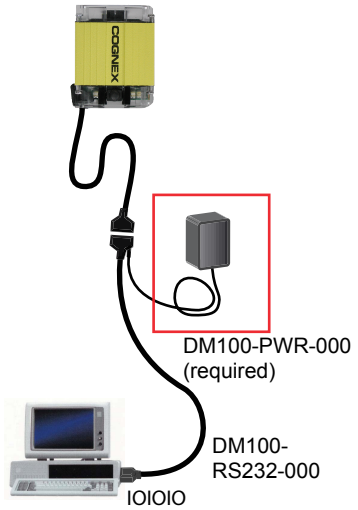

...connecting to the PC through basic I/O module:

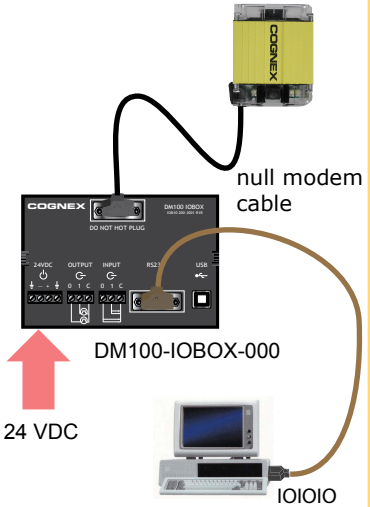

NOTE: Serial connections from the extended I/O module to the PC are only supported for short (<60 bytes) data transmissions.

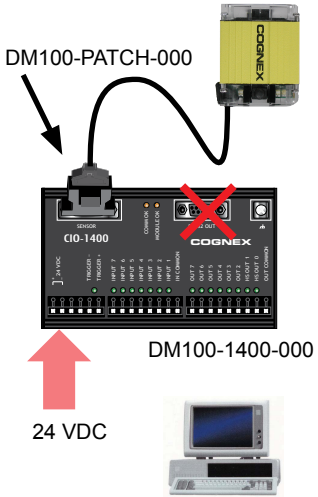

2 Scan the connection code

RS-232 Serial

See page 27 for codes to set baud rate and other RS-232 parameters.

Wiring the Basic I/O Module

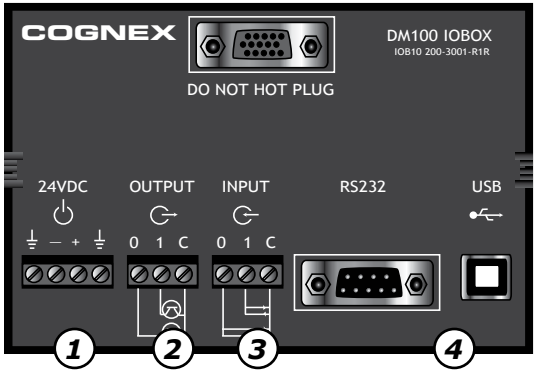

NOTE: You must use a null modem cable when connecting the Basic I/O Module to a PC's RS-232 serial port.

1 ***Power:*** 5–24 VDC, 2.5W peak. Connect either ground pin to chassis ground.

2 ***Discrete Output:*** Current sink only; must connect logical ground to common. Outputs are opto-isolated and protected against reverse polarity. Max current 50 mA @ 24 VDC. Output 1 used for external illumination control by default.

3 ***Trigger Input:*** Opto-isolated, polarity-independent, current source or sink. Input 0 is dedicated trigger line.

4 ***RS-232 and USB:*** If USB connection is detected, USB communications is automatically selected; otherwise RS-232 connection is used.

Output Wiring Example

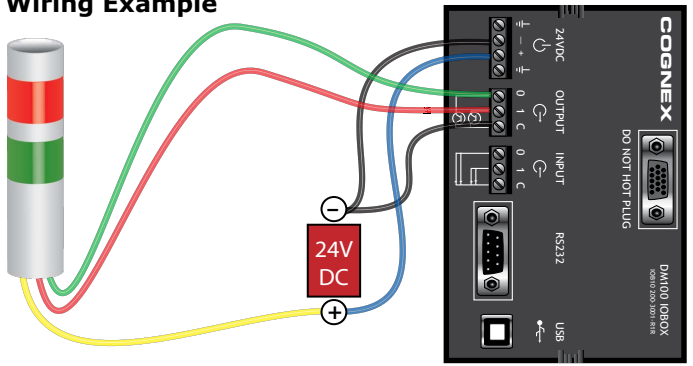

Input Wiring Example

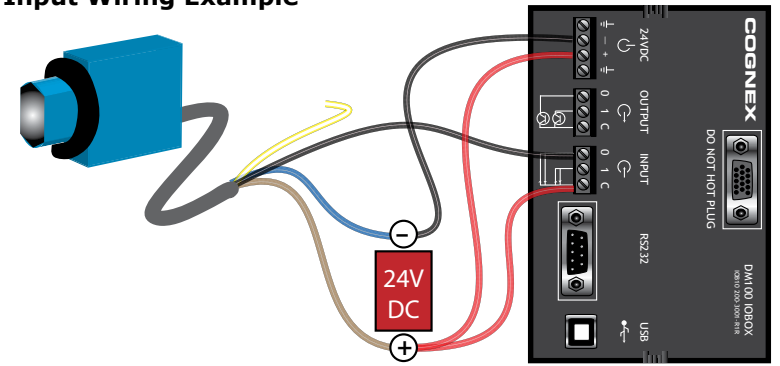

Wiring the Expansion I/O Module

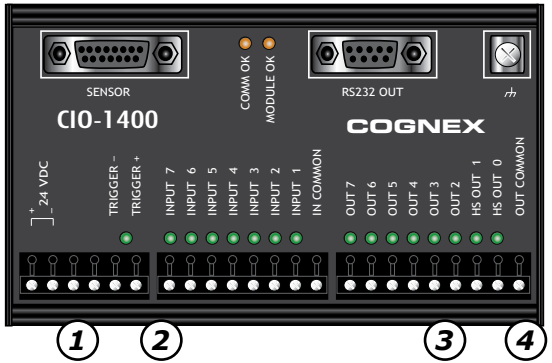

The Trigger+ connector is wired to Input 0 on the DataMan 100. The Trigger- connector is wired to Input Common while the unlabeled connector next to Trigger- is wired to Input 1 on the DataMan 100.

The Input 1 through Input 7 connectors are not used.

For limited data transmission over the RS-232 port, use a straight-through serial cable.

1 ***Power:*** 24 VDC ± 10%, 4.2W peak.

2 ***Trigger Input:*** Opto-isolated, polarity-independent, current source or sink. Directly wired to DataMan 100 input line 0.

3 ***Outputs:*** Six extended output lines configurable using the DataMan Setup Tool. Current sink only; must connect logical ground to common. Outputs are opto-isolated and protected against reverse polarity. Max current 100 mA @ 24 VDC.

4 ***High-Speed Outputs:*** Two outputs directly wired to DataMan 100 output lines. Current sink only; must connect logical ground to common. Outputs are opto-isolated and protected against reverse polarity. Max current 50 mA @ 24 VDC.

Output Wiring Example

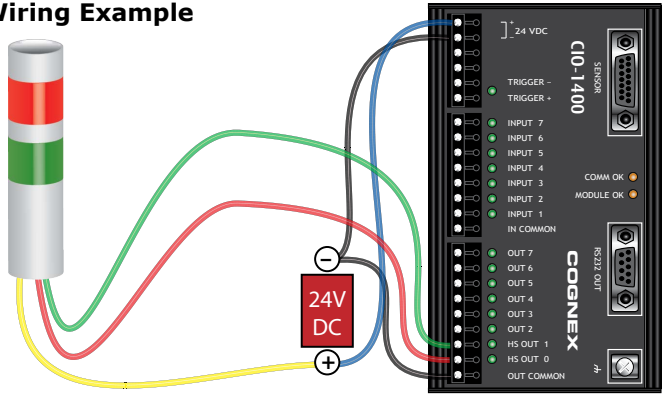

Input Wiring Example

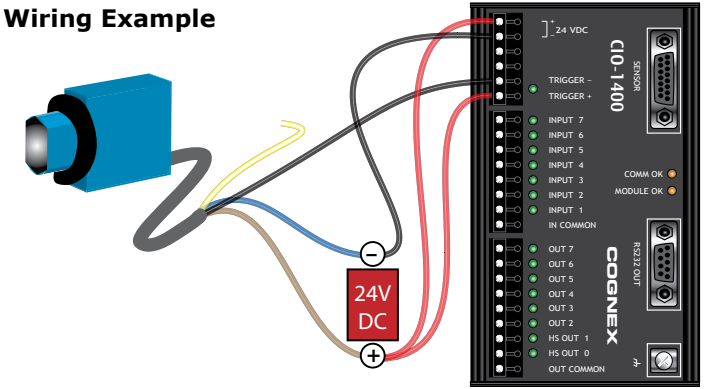

DataMan 100 Trigger Types

DataMan decodes when you tell it to. You can trigger a read by:

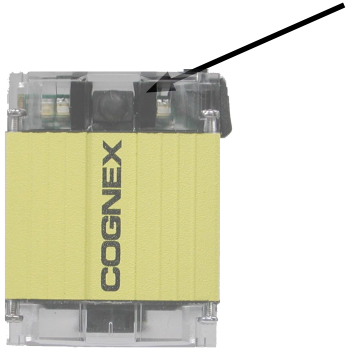

1 Pressing and holding the trigger button.

2 Sending a pulse on Input-0 line.

3 Sending a command on the RS-232 serial line. (You must be using the RS-232 communications type.

4 Clicking the Trigger button or pressing

<Ctrl>-T in the Setup tool.

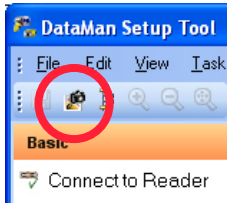

Trigger Modes

DataMan supports a variety of trigger modes:

- Single: Acquires a single image and attempts to decode any symbol it contains, or more than one symbol in cases where multicode is enabled. The reader relies on an external trigger source.
- Presentation: Repeatedly scans for a symbol and decodes it whenever one is detected. The reader relies on an internal timing mechanism to acquire images.
- Manual (default): Begins acquiring images when you press the trigger button on the reader or the discrete trigger input is activated, and continues acquiring images until a symbol is found and decoded or you release the button or the discrete trigger input is deactivated.
- Burst: Performs multiple image acquisitions based on an external trigger and decodes any symbol appearing in a single image or within a sequence of images, or multiple symbols in a single image or within a sequence of images when multicode is enabled. You can control the number of images within each burst and the interval between image acquisitions.
- Self: Similar to Presentation mode in that the reader perpetually scans for symbols and decodes them each time one is detected. Unlike Presentation mode, however, Self mode supports multicode results and a decode attempt occurs with every image.
- Continuous: Begins acquiring images based on a single external trigger and continues to acquire images until a symbol is found and decoded, or until multiple images containing as many codes as specified in multicode mode are located, or until the trigger is released.

Training

For best performance, you can train DataMan. Train DataMan by placing a code in front of the reader and doing one of the following:

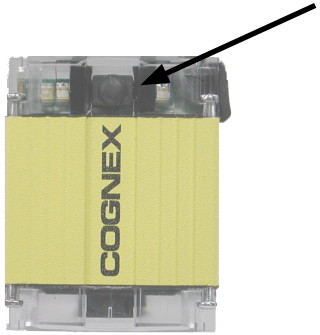

1 Press and hold the trigger button for at least 3 seconds. This trains the code and optimizes lighting.

2 Click and hold the trigger button in the Setup for at least 3 seconds. This trains the code and optimizes lighting.

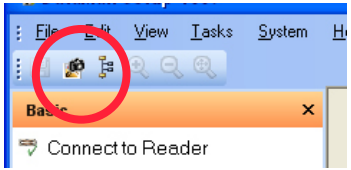

3 In the **Display** pane of the Setup Tool you can click the **Train Code** button to train the code, and you can click the **Optimize Lighting** button to optimize lighting.

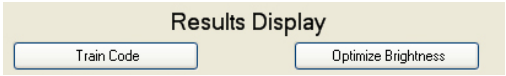

Training and Trigger Modes

Training is supported for the trigger modes shown below:

Trigger Mode	Training Supported?
Single	Yes
Presentation	No
Manual	No
Burst	Yes
Self	Yes
Continuous	Yes

Training Feedback

DataMan reports the status of the training and brightess optimization operations using its signalling LEDs:

A red LED is displayed during brightness optimization. When complete, one, two, or three green LED flashes indicates the optimized exposure time:

- One: > 0.4 msec
- Two: < 0.4 msec
- Three: <= 0.2 msec

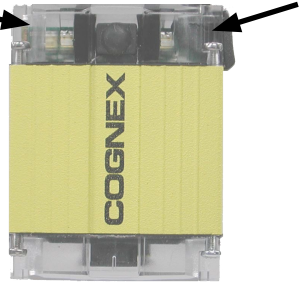

Displays steady green if trained, steady yellow if untrained.

Start the Setup Tool

Connect the reader to the Setup Tool to configure it with the type of symbologies it will decode as well as other parameters, such as the type of trigger it will use and the format of the results it will generate.

Connect to DataMan

Establish a connection over a USB or RS-232 serial port

Results Display

View decoded images and data

Light and Camera Settings

Configure illumination and exposure settings

System Settings

Configure input and output lines

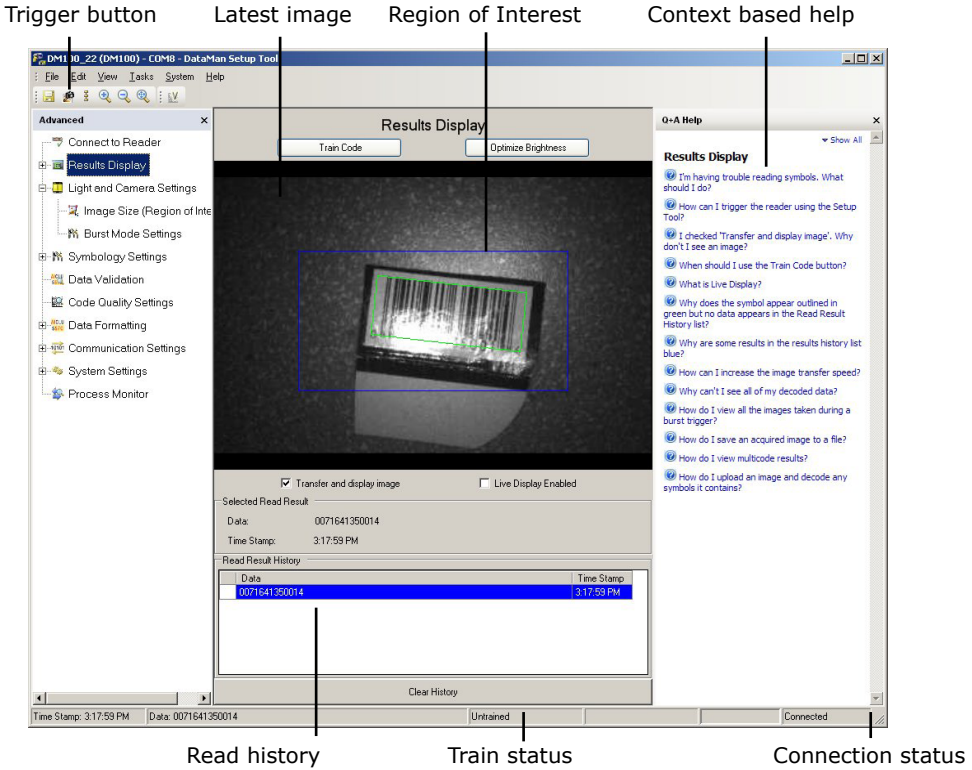

Use the Setup Tool General Toolbar

Each reader can store its current set of run-time parameters to a configuration (.cfg) file, which contains information such as the enabled symbologies and how any output data should be formatted.

The same configuration file can be loaded onto multiple readers, as the file does not contain identification information such as the IP address or device name of the reader used to create it.

A reader can also generate a Cognex device configuration (.cdc) file, which stores the set of run-time parameters plus any identification data, such as the name of the device, its IP address, subnet mask, and so on. Cognex recommends generating a device configuration file for each reader to allow you to restore a reader to its operating state with minimal effort.

Use the **File** menu of the Setup Tool to manage .cfg and .cdc files:

File Menu	
Open Configuration	Open a saved .cfg configuration file.
Save Configuration	Create a .cfg configuration file of current run-time parameters.
Print Configuration Code	Not supported on the DataMan 100.
Restore Device	Load a saved device configuration .cdc file, with run-time parameters plus device-specific information for a particular DataMan 100.
Backup Device	Create a device configuration .cdc file for a specific reader.
Load Image	Load an 8-bit uncompressed grey-scale .bmp or .jpg image for analysis.
Save Image	Save the latest acquired image using the .jpg or .bmp file format.
Save Burst Images	Save the latest batch of burst images.

Use the **Edit** menu for standard Cut, Copy and Paste operations.

Use the **View** menu to view reader information (serial number, firmware version, and so on) and to enable and disable various elements of the Setup Tool, and the **Tasks** menu to switch between various Setup Tool options.

Use the **System** menu to manage the current settings on the reader and to upgrade the features it currently supports:

System Menu	
Save Settings	Save the current parameters to non-volatile memory, which allows the reader to restore these settings each time you reboot it.
Reset Configuration	Reset all configuration parameters in RAM (volatile memory) to the default settings.
Update Firmware	Update the reader software.
Upload Feature Key	Unlock additional features available in the reader software if you have the right key.
VeriCode License	Add VeriCode decoding by entering a license string provided by Veritek. Ask your Cognex sales representative for details.

Use the **Help** menu to display Setup Tool version information.

DataMan 100 Specifications

Weight	125 g	
Operating Temperature	0ºC — 40ºC (32ºF — 104ºF)	
Storage Temperature	-10ºC — 60ºC (-14ºF — 140ºF)	
Maximum Humidity	95% (non-condensing)	
Environmental	IP65	
Vibration	EN61373 including IEC 60068-2-6,60068-2-64 6.4, and 60068-2-27	
Codes	Data Matrix™ (IDMax: ECC 0, 50, 80, 100, 140, and 200; IDQuick: ECC200) Vericode (optional) QR Code and microQR Code UPC/EAN/JAN Codabar, Interleaved 2 of 5, Code 39, Code 128, and Code 93, Pharma, Postal, RSS/CS, PDF 417, MicroPDF 417	
Discrete I/O operating limits	• DataMan 100 • Basic I/O Module • Trigger, HS Output 0, and HS Output 1 on Extended I/O module	Max output current: 50 mA @ 24 VDC Output load: 500 Ω @ 24 VDC Input voltage limits: - 25 VDC — +25 VDC
	• Outputs 2-7 on Extended I/O Module	Max output current: 100 mA @ 24 VDC Output load: 240 Ω @ 24 VDC Input voltage limits: - 24 VDC — +24 VDC ttt(logic 0: 0 – ±8V, logic 1: ±10V – ±24V)
Power Supply Requirements	• DataMan 100 and Basic I/O Module)	5 — 24 VDC 2.5 W maximum LPS or NEC class 2 power supply
	• DataMan 100 and Extended I/O Module	24 VDC ± 10% 4.2 W maximum LPS or NEC class 2 power supply

DataMan 100 Cable Pinout

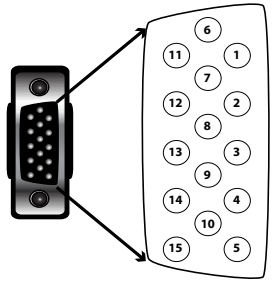

Note: Pin numbers are shown for cable connector, not I/O module.

PIN	Color	Signal
1	Brown	Reserved
2	Green	TxD (RS-232)
3	Green/Black	RxD (RS-232)
4	Red & Red/Black	GND
5	Brown/White	DC+ (system power, 5-24 VDC)
6	Blue	Reserved
7	Blue/White	Output-0
8	White	Input-0
9	White/Black	Input-1
10	Light Blue	Reserved
11	Light Blue/Black	Output-1
12	Light Blue/ Yellow	Output-Common
13	Light Blue/ Green	Input-Common
14	Yellow	Reserved
15	Yellow/Black	Reserved

Note: Colors are of individual wires within I/O cable.

Digital Input Wiring Diagrams

Current Sink Configuration

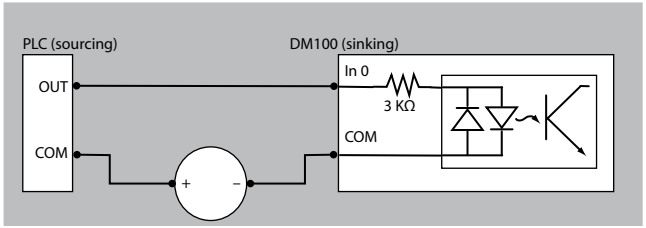

Current Source Configuration

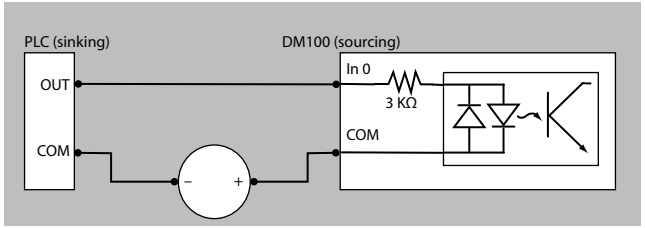

Load to a TTL Buffer

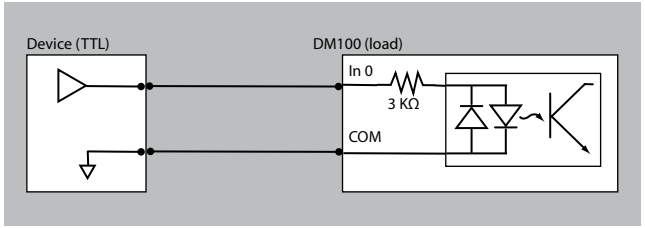

PNP Configuration

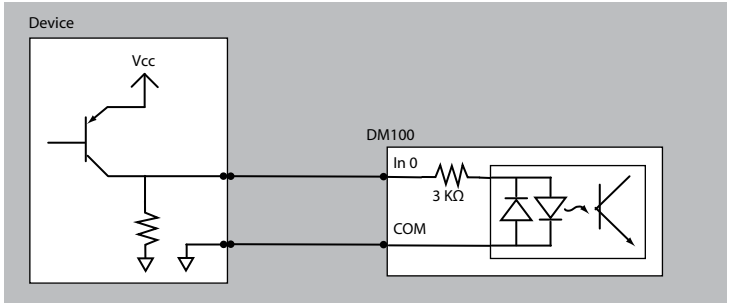

NPN Configuration

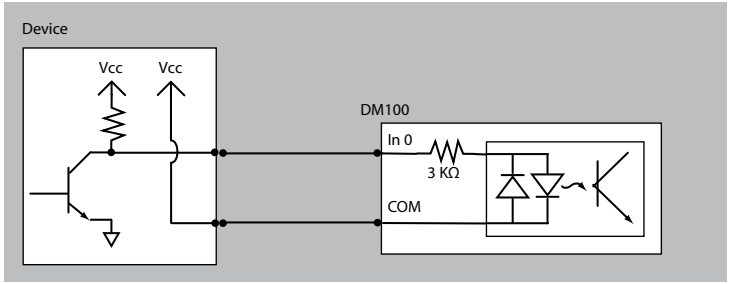

Digital Output Wiring Diagrams

Sinking Outputs, Sourcing Inputs

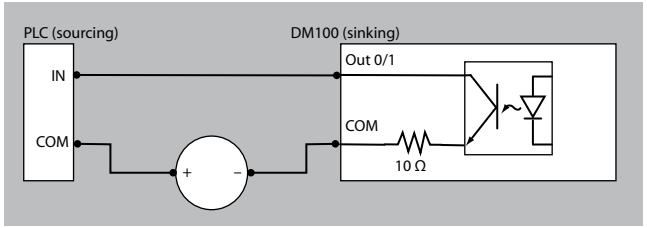

Sinking Outputs, Sinking Inputs

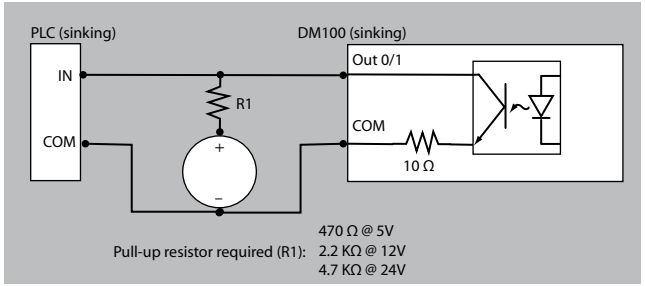

Sinking Outputs, Sinking Inputs

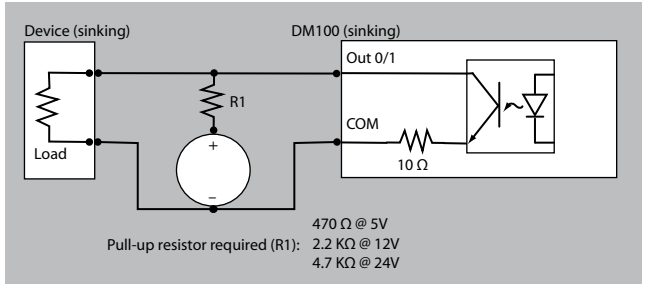

Multi-Port Connections

You can connect multiple DataMan 100 readers to a single PC (or other device equipped with a serial port) using a multi-port connection.

A multi-port connection creates a daisy-chain of readers. Each reader receives serial data from the previous reader and transmits it to the next reader. When a reader transmits data, it is passed through each of the readers in the chain between it and the PC.

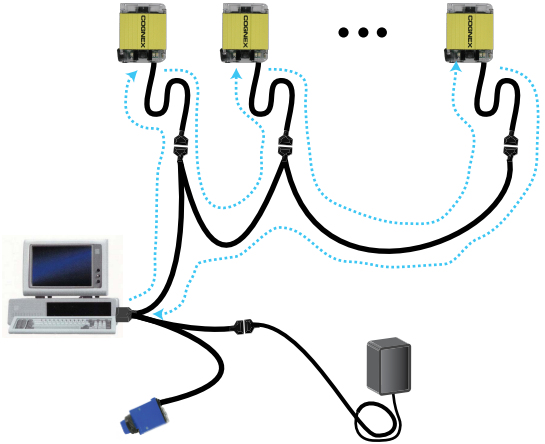

Because of the large number of possible configurations, Cognex does not supply cabling for multi-port DataMan 100 connections. Instead, you must construct your own cable that meets the requirements of your system configuration.

The cable must provide a DB-15 connector for each DataMan 100 and a DB-9 connector for the PC serial port. Each DB-15 connector must provide Tx Data, Rx Data, Trigger (Input 0), ground, and DC power. The Tx Data and Rx Data pins on adjacent connectors must be connected to provide the multi-port connection.

The following diagram shows how to create a multi-port cable for a 3-reader system. In the example, all the readers share a common trigger. It is also possible to wire individual triggers for each reader.

Multi-Port Co

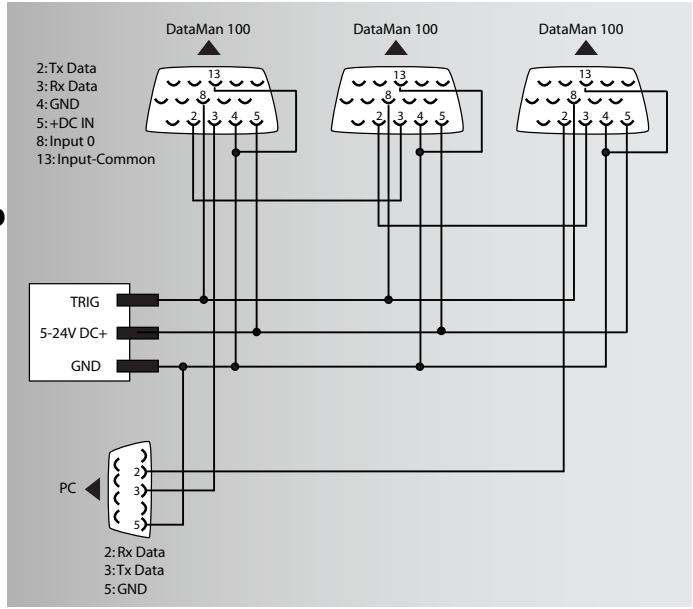

Configure for Multi-Port Operation

You must connect the Setup tool to each DataMan 100 in turn using a USB connection and set the DataMan for multi-port operation. To configure a DataMan 100 for multi-port operation, click on the **Communication Settings** step and check the **Enable Multi-Port (RS-232 Sharing)** check box.

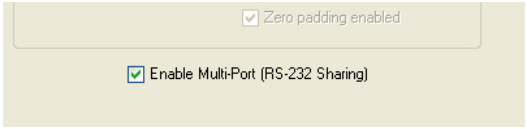

There is no guaranteed delivery order when multiple readers transmit data using a multi-port connection; read results may arrive at the PC in any order. You can configure each DataMan 100 reader in a multi-port connection to add identifying data to each read result. Your PC application can then determine which reader produced a specific read result.

To do this, click on the **Data Formatting** step, check the **Standard Formatting Enabled** box (for each symbology that you are using), and enter text in the **Leading Text** field. (You can also add trailing text by entering text in the **Trailing Text** field.)

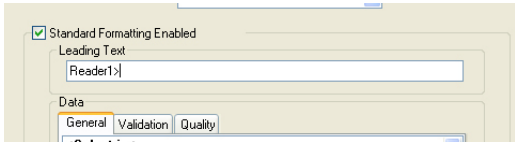

Multi-Port Usage Notes

You can obtain the best results when using multi-port connections by keeping the following usage guidelines in mind as you design your system:

- The maximum cable length between any two DataMan 100 readers or between the PC and any DataMan reader should be no greater than 15 meters.
- There is no fixed limit to the number of DataMan 100 readers that you can connect to a single PC. Each reader introduces a delay of about 100 msec when it retransmits received serial data. If you have 5 readers, this means that there will be a 400 msec delay between the time the first reader in the chain transmits data and the PC receives it.
- Each DataMan 100 reader must receive a hardware trigger signal on its Input 0 line. You can wire the input ports to a common trigger signal or you can provide individual triggers for each reader.
- Each DataMan 100 reader must be individually configured for multi-port operation, and you must perform this configuration using a USB connection.
- If *any* reader in the multi-port chain loses power or becomes disconnected, then no data from any other reader will be transmitted.
- If a DataMan 100 is transmitting its own read result, it will buffer any data received from another reader until it has finished its own data transmission. If a DataMan 100 is transmitting another reader's data, it will buffer its own data if it receives a trigger signal while it is processing the other reader's data.
- If you use a single power supply for multiple readers, make sure that the power supply can provide enough power for all of the readers.

SensorView Teach Pendant Support

A SensorView Teach Pendant is a panel-mounted control system that lets you train symbologies and view images, decoded data and statistics from a DataMan 100 reader.

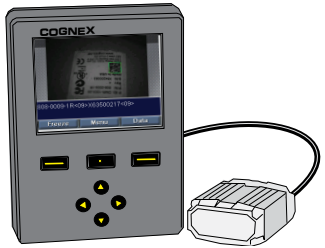

When connected to a DataMan 100, a SensorView Teach Pendant shows you acquired images and decoded data.

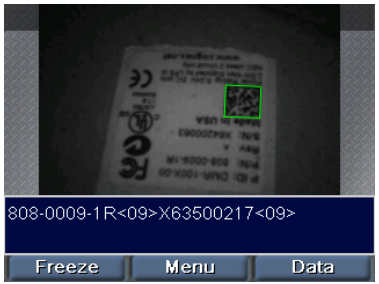

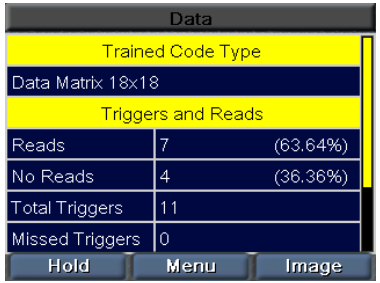

The SensorView Teach Pendant User's Guide describes how to connect a SensorView Teach Pendant to your DataMan 100.

RS-232 Parameter Codes

9600 Baud

115,200 Baud

19,200 Baud

8-1-none

38,400 Baud

8-1-even

57,600 Baud

8-1-odd

Warnings and Notices

CAUTION: This device requires the use of an LPS or NEC class 2 power supply.

CAUTION: Do not connect or disconnect this device from the I/O module or 15-pin USB adapter cable while the I/O module or adapter cable is connected to a PC .

NOTE: For product support, contact http://support.cognex.com

Compliance Notice

The DataMan 100 series meets or exceeds the requirements of all applicable standards organizations for safe operation. However, as with any electrical equipment, the best way to ensure safe operation is to operate them according to the agency guidelines that follow. Please read these guidelines carefully before using your device.

Regulator	Specification
USA	FCC 47 CFR Part 15 Subpart B, Class A
Canada	ICES-003
European Community	EN55022 (CISPR 22) Class A
	EN55024:1998 +A1:2001 +A2: 2003
	EN60950
Australia	C-TICK, AS/NZS CISPR 22 / EN 55022 for Class A Equipment
Japan	J55022, Class A

FCC Class A Compliance Statement

This equipment has been tested and found to comply with the limits for a Class A digital device, pursuant to Part 15 of the FCC rules. These limits are designed to provide reasonable protection against harmful interference when the equipment is operated in a commercial environment. This equipment generates, uses, and can radiate radio frequency energy and, if not installed and used in accordance with the instructions, may cause harmful interference to radio communications. Operation of this equipment in a residential area is likely to cause harmful interference, in which case the user will be required to correct the interference at personal expense.

Canadian Compliance

This Class A digital apparatus complies with Canadian ICES-003.
Cet appareil numérique de la classe A est conforme à la norme NMB-003 du Canada.

C-Tick Statement

Conforms to AS/NZS CISPR 22/ EN 55022 for Class A Equipment.

European Compliance

The CE mark on the product indicates that the system has been tested to and conforms with the provisions noted within the 2004/108/EC Electromagnetic Compatibility Directive and the 2006/95/EC Low Voltage Directive.

For further information please contact:

Cognex Corporation
One Vision Drive
Natick, MA 01760
USA

Cognex Corporation shall not be liable for use of our product with equipment (i.e., power supplies, personal computers, etc.) that is not CE marked and does not comply with the Low Voltage Directive.

UL and cUL Statement

UL and cUL listed: UL60950-1 1st ed. and CSA C22.2 No.60950-1 1st ed.
Certified to CB scheme IEC 60950-1:2001 1st ed.

For European Community Users

Cognex complies with Directive 2002/96/EC OF THE EUROPEAN PARLIAMENT AND OF THE COUNCIL of 27 January 2003 on waste electrical and electronic equipment (WEEE).

This product has required the extraction and use of natural resources for its production. It may contain hazardous substances that could impact health and the environment, if not properly disposed.

In order to avoid the dissemination of those substances in our environment and to diminish the pressure on the natural resources, we encourage you to use the appropriate take-back systems for product disposal. Those systems will reuse or recycle most of the materials of the product you are disposing in a sound way.

The crossed out wheeled bin symbol informs you that the product should not be disposed of along with municipal waste and invites you to use the appropriate separate take-back systems for product disposal.

If you need more information on the collection, reuse, and recycling systems, please contact your local or regional waste administration.

You may also contact your supplier for more information on the environmental performance of this product.

Copyright © 2010 Cognex Corporation All Rights Reserved. This document may not be copied in whole or in part, nor transferred to any other media or language, without the written permission of Cognex Corporation. The hardware and portions of the software described in this document may be covered by one or more of the U.S. patents listed on the Cognex web site http://www.cognex.com/patents.asp. Other U.S. and foreign patents are pending. Cognex, the Cognex logo, and DataMan are trademarks, or registered trademarks, of Cognex Corporation.



P/N 590-7110