WITTENSTEIN | alpha

HG+

Operating Manual

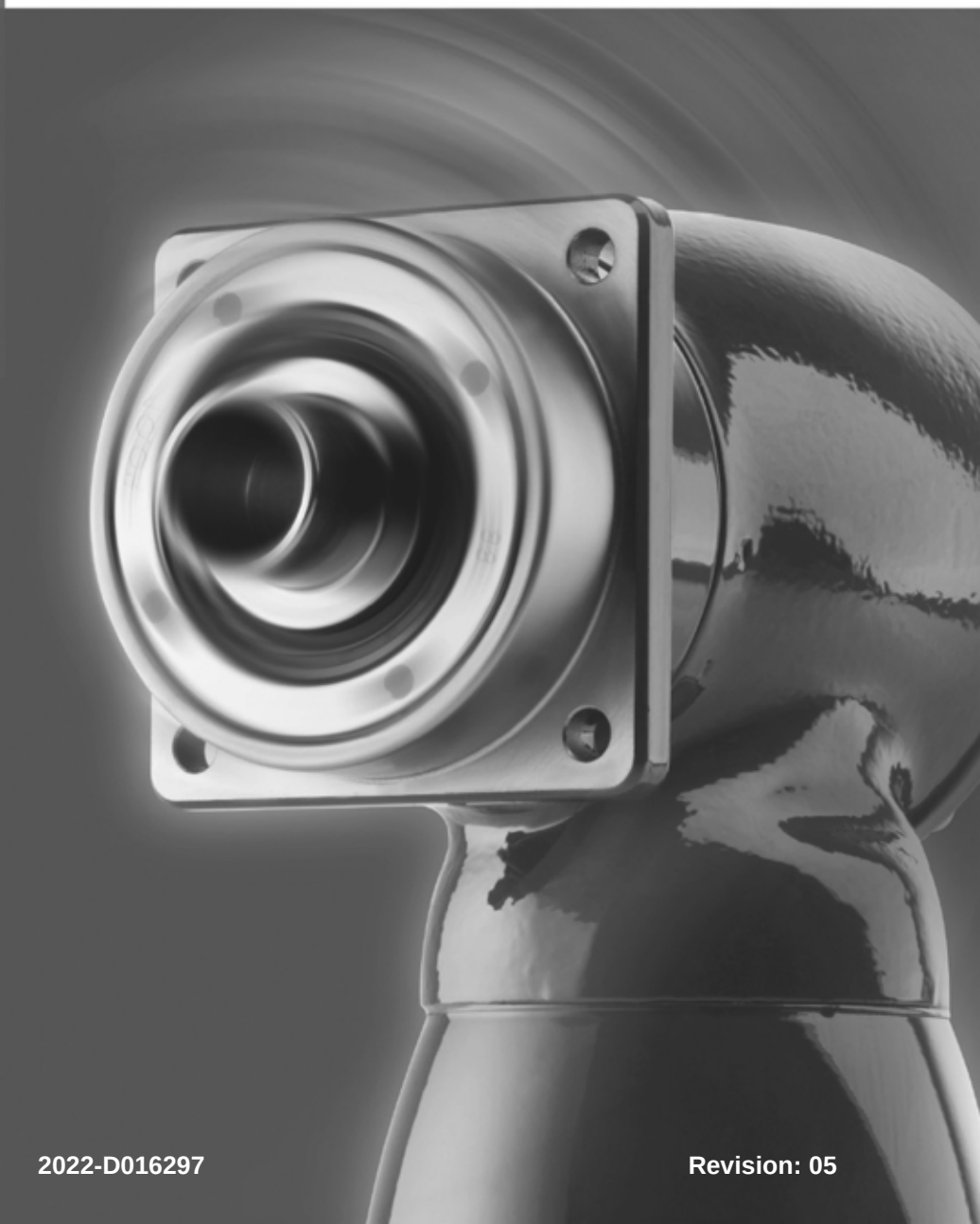

2022-D016297

Revision: 05

Revision history

Revision	Date	Comment	Chapter
1	17.08.04	New version	All
2	21.06.05	Technical data	All
3	27.03.06	Technical data, ISO 3864	All
4	08.01.08	ANSI, Layout 07	All
5	01.07.08	Layout WITTENSTEIN	All

Service

In case you have technical questions,
please contact:

WITTENSTEIN alpha GmbH

Customer Service
Walter-Wittenstein-Straße 1
D-97999 Igersheim

Tel.: +49 7931 493-10900

Fax: +49 7931 493-10903

E-mail: service-alpha@wittenstein.de

© WITTENSTEIN alpha GmbH 2008

This documentation is copyright protected.

WITTENSTEIN alpha GmbH reserves all the rights to photo-mechanical reproduction, copying, and the distribution by special processes (such as computers, file media, data networks), even in parts.

Subject to technical and content changes without notice..

Contents

1 On this manual 2
1.1 Signal words 2
1.2 Safety symbols 2
1.3 Information symbols 3
2 Safety 4
2.1 EC – Machinery directive 4
2.2 Dangers 4
2.3 Personnel 4
2.4 Intended use 4
2.5 Guarantee and Liability 4
2.6 General safety instructions 5
3 Description of the gearhead 6
3.1 General Information 6
3.2 Type plate 6
3.3 Ordering code 7
3.4 Performance statistics 7
3.5 Weight 7
4 Transport and storage 8
4.1 Scope of delivery 8
4.2 Packaging 8
4.3 Transport 8
4.3.1 Transport of gearheads up to and including size HG+ 140 8
4.3.2 Transport of gearheads as of size HG+ 180 8
4.4 Storage 8
5 Montage 9
5.1 Preparation 9
5.2 Mounting the motor onto the gearhead 10
5.3 Mounting gearhead on a machine 11
5.4 Mounting on the output side 11
5.4.1 Mounting on the hollow shaft with shrink disk (HG+) 11
5.4.2 Installing the shrink disk 12
6 Startup and operation 13
7 Maintenance and disposal 14
7.1 Maintenance work 14
7.1.1 Visual inspection 14
7.1.2 Checking the tightening torques 14
7.2 Startup after maintenance work 14
7.3 Maintenance schedule 14
7.4 Notes on the lubricant used 15
7.5 Supplementary information 15
8 Malfunctions 16
9 Appendix 17
9.1 Specifications on mounting onto a motor 17
9.2 Specifications on mounting onto a machine 17
9.3 Tightening torques for common thread sizes in general mechanics 18

1 On this manual

This operating manual contains contains necessary information for the safe operation of the right-angle gearhead HG+, referred to as gearhead in the following.

The operator must make sure that this operating manual is read through by all persons assigned to install, operate, or maintain the gearhead, and that they understand it.

Store the operating manual within reach near the gearhead.

1.1 Signal words

The following signal words are used to bring your attention to dangers, prohibitions, and important information:

	DANGER **This signal word points out to an immanent danger that can cause serious injuries and even death.**
	WARNING **This signal word points out to a possible danger that can cause serious injuries and even death.**
	CAUTION **This signal word points out to a possible danger that can cause slight to serious injuries.**
	CAUTION **This signal word (without warning symbol) points out to a possible danger that can cause material damage.**
	INFORMATION **This signal word draws your attention to application tips or especially important information when handling the gearhead.**

1.2 Safety symbols

The following safety symbols are used to bring your attention to dangers, prohibitions, and important information:


General danger


Hot surface


Suspended loads


Danger of pull-in


Environment protection


Information

1.3 Information symbols

The following information symbols are used:

- requires you to carry out an action
  - ➲ indicates the results of an action
- ⓘ provides additional information on handling

2 Safety

This operating manual, especially the safety instructions and the rules and regulations valid for the operating site, must be observed by all persons working with the gearhead.

In addition to the safety specifications mentioned in the operating manual, the general and also the local regulations on the prevention of accidents and on environmental protection should be observed.

2.1 EC – Machinery directive

Within terms of the EC - machinery directive 2006/42/EC, the gearhead is not considered as an autonomous machine, but as a “component to install in machines”.

Operation is prohibited within the area of validity of the EC directive until it has been determined that the machine in which this gearhead is installed corresponds to the regulations within this directive.

2.2 Dangers

The gearhead has been constructed according to current technological standards and accepted safety regulations. To avoid danger to the operator or damage to the machine, the gearhead may be put to use only for its intended usage (see chapter 2.4 "Intended use") and in a technically flawless and safe state.

2.3 Personnel

Only persons who have read and understood this operating manual may carry out work on the gearhead.

2.4 Intended use

The gearhead is suitable for all industrial applications that do not come under article 2 of the EC directive 2002/95/EC (usage restriction of certain dangerous materials in electrical and electronic equipment).

The gearhead is specified for installment on motors that:

- correspond to the design B5 (for any divergences, please consult our Customer Service Department [Technical Customer Service]).
- show a radial and axial runout tolerance of at least “N” according to DIN 42955 and
- have a smooth shaft.

2.5 Guarantee and Liability

Guarantee and liability claims are excluded for personal injury and material damage if the claims derive from one or more of the following causes:

- improper use
- improper assembly/disassembly or improper operation
- operation of the gearhead when safety devices and equipment are defective
- operation of a heavily soiled gearhead
- non-observance of information on transport and storage
- modifications or reconstructions that have been carried out without the written authorisation of **WITTENSTEIN alpha GmbH**
- improper or neglected maintenance and repair

2.6 General safety instructions



⚠ WARNING

Objects flung out by rotating components can cause serious injuries.

- Remove objects and tools from the gearhead before putting it into operation.



⚠ WARNING

Rotating components on the gearhead can pull in parts of the body and cause serious injuries and even death.

- Keep a sufficient distance to rotating machinery while the gearhead is running.



⚠ CAUTION

Hot gearhead housing can cause serious burns.

- Touch the gearhead housing only when wearing protective gloves or after the gearhead has been idle for some time.



INFORMATION

Solvents can pollute soil and water.

- Use and dispose of cleaning solvents appropriately.

3 Description of the gearhead

3.1 General Information

The gearhead is a one- or multistage, low-backlash right-angle gearhead, which is manufactured as standard in the “M” version (motor installation).

Motor centring is performed:

- up to gearhead size HG+ 100 and a motor shaft diameter of 28 mm of through the clamping hub and coupling.
- from gearhead size HG+ 140 and a motor shaft diameter of > 28 mm through the centring collar of the motor

Avoid a radial distortion of the motor.

Adaptation to various motors is done through an adaptor plate and a spacer sleeve.

The gearhead has been designed to compensate for thermal linear expansion of the motor shaft.

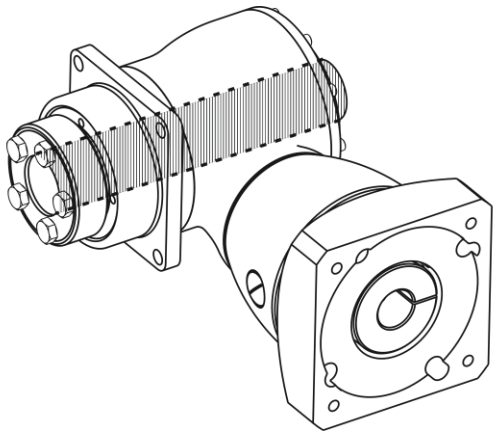

The hollow output shaft has a smooth design (without feather key groove). For the load shaft, we recommend the tolerance h6 (DIN ISO 286). The material must have a minimum yield stress of 385 N/mm^2.

For varying applications, the gearhead is available with one or with two clampable shaft ends. The machine shaft is connected to the gearhead by means of a shrink disk.

3.2 Type plate

The type plate is attached to the gearhead housing.

		Designation
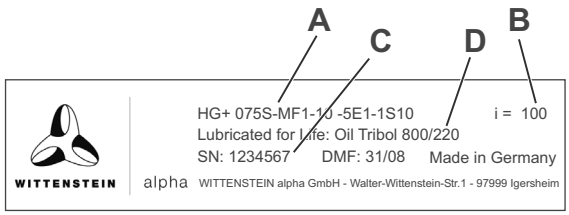	A	Ordering key (see chapter 3.3 "Ordering code")
	B	Ratio
	C	Series number
	D	Lubricant

Tbl-1: Type plate (sample values)

3.3 Ordering code

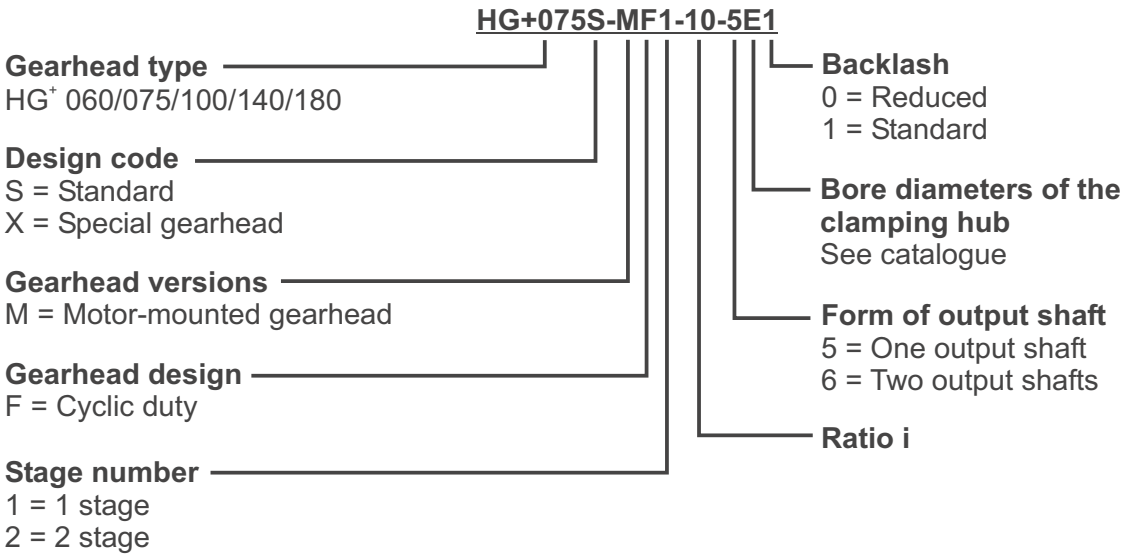

3.4 Performance statistics

Please refer to our catalogue or our Internet page at http://www.wittenstein-alpha.de for the maximum permitted speeds and torques.

INFORMATION

Please consult our service department if your gearhead is older than a year. You will then receive the valid performance data.

3.5 Weight

The table "Tbl-2" specifies the gearhead dimensions with medium-sized adaptor plate. If another adaptor plate is mounted, the actual dimensions can deviate by up to 10%.

Gearhead size HG+	060	075	100	140	180
1–stage [kg]	2.9	4.8	9.3	23.0	46.0
2–stage [kg]	2.9	5.1	9.4	24.0	47.0

Tbl-2: Weight

4 Transport and storage

4.1 Scope of delivery

- Check the completeness of the delivery against the delivery note.

ⓘ Missing parts or damage must be notified immediately in writing to the carrier the insurance, or **WITTENSTEIN alpha GmbH**.

4.2 Packaging

The gearhead is delivered packed in foil and cardboard boxes.

- Dispose of the packaging materials at the recycling sites intended for this purpose. Observe the locally valid regulations for disposals.

4.3 Transport



CAUTION

Impacts caused for instance by dropping or setting down too quickly may damage the gearhead.

- Use only hoisting equipment and transportation devices with sufficient capacity.
- The permitted lifting weight of a hoist may not be exceeded.
- Lower the gearhead slowly.



⚠ WARNING

Suspended loads may fall and cause serious injuries and even death.

- Do not stand under suspended loads.

For specifications on the weights see Chapter 3.5 "Weight".

4.3.1 Transport of gearheads up to and including size HG+ 140

No special transport mode is prescribed for transporting the gearhead.

4.3.2 Transport of gearheads as of size HG+ 180

For gearheads as of size HG+ 180 a support bore (A) is provided for a ring screw (e.g. acc. to DIN 580). The ring screw is used for secure attachment to hoisting equipment.

	Gearhead size HG+	Support bore (A) [Ø] x depth [mm]
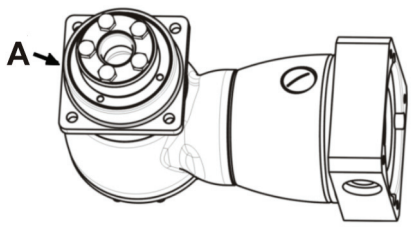	180	M8 x 14

Tbl-3: Support bore on the gearhead

4.4 Storage

Store the gearhead in horizontal position and dry surroundings at a temperature of 0 °C to +30 °C in the original packaging. Store the gearhead for a maximum of 2 years.

For storage logistics we recommend the “first in – first out” principle.

5 Montage



CAUTION

Loose or overloaded screw connections can damage the gearhead.

- Use a calibrated torque wrench to tighten and check all screw connections for which a tightening torque has been specified.



CAUTION

Intensive distortions when assembling the motor (e.g. for motors with shaft shoulder, extensive chamfer radius or longer shafts than permitted for the gearhead) can damage the gearhead and the motor.

- Check the interfering edges by measuring, or by a measurement check based on our catalogue specifications and the information of the motor manufacturer.
- Contact our Customer Service Department.

5.1 Preparation



CAUTION

Pressurised air can damage the gearhead.

- Do not use pressurised air to clean the gearhead.



CAUTION

Directly sprayed cleaning agents can alter the frictional values of the clamping hub.

- Only spray cleaning agents onto a cloth, with which you can then clean the clamping hub.

- Clean/de-grease the following gearhead components with a clean and lint-free cloth and grease-dissolving, non-aggressive detergent:
  - all fitting surfaces to neighbouring components
  - centring
  - the motor shaft
  - only the inside diameter of the clamping hub
  - the spacer sleeve (if provided) inside and out
- Check the fitting surfaces in addition for damage and foreign bodies.

5.2 Mounting the motor onto the gearhead

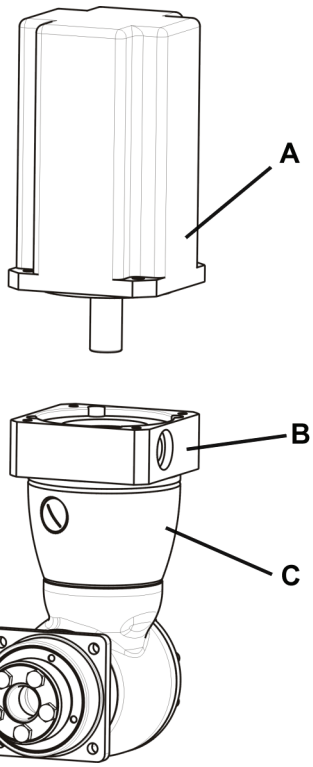

- If the motor shaft has a feather key, remove the feather key.
  - ⓘ If recommended by the motor manufacturer, apply a half wedge.
- Remove the plug from the mounting bore in the adaptor plate (B).
- Turn the clamping hub (I) until the clamping bolt (H) can be reached over the mounting bore.
- Release the clamping bolt (H) of the clamping hub (I) with one revolution.
- Push the motor shaft into the clamping hub of the gearhead.
  - ⓘ The motor shaft should slip in easily. If this is not the case, the clamping bolt must be loosened more.
  - ⓘ A slotted spacer sleeve has to be installed extra for certain motor shaft diameters and applications.
  - ⓘ The slot of the spacer sleeve (if provided) and clamping hub have to be flush with the groove (if provided) of the motor shaft, see table "Tbl-4".
  - ⓘ No gap is premitted between motor (A) and the adaptor plate (B).

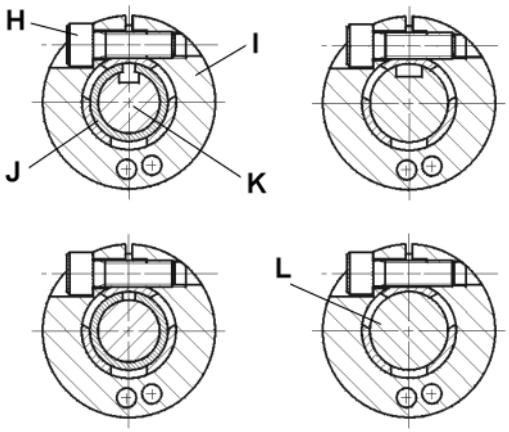

	Designation
H	Clamping bolt
I	Clamping hub
J	Spacer sleeve
K	Grooved shaft
L	Smooth shaft

Tbl-4: Arrangement of motor shaft, clamping hub and spacer sleeve

- Apply screw-bonding agent to the four screws (e.g. Loctite 243).
- Fasten the motor (A) onto the adaptor plate (B) with the four screws.
- Tighten the clamping bolt (H) of the clamping hub (I).
  - ⓘ For screw sizes and specified torques refer to chapter 9.1 "Specifications on mounting onto a motor", table "Tbl-10".
- Screw in plug of the adaptor plate (B).
  - ⓘ For screw sizes and specified torques refer to table "Tbl-5".

Width across flats [mm]	5	8	10
Tightening torque [Nm]	10	35	50

Tbl-5: Torques for the plugs

5.3 Mounting gearhead on a machine

- Smear screw-bonding agent (e.g. Loctite 243) onto the fastening bolts.
- Fasten the gearhead on the machine with the bolts through the holes.
  - ⓘ Mount the gearhead in such a way that the type plate remains legible.
  - ⓘ Do not use washers (e.g. plain washers, tooth lock washers).
  - ⓘ For screw sizes and specified torques refer to chapter 9.2 "Specifications on mounting onto a machine", table "Tbl-11".

5.4 Mounting on the output side

5.4.1 Mounting on the hollow shaft with shrink disk (HG+)

The hollow shaft is axially secured to the machine shaft by means of a shrink disk connection. If you have ordered a shrink disk, it has already been installed on the hollow shaft.

- If you use another shrink disk, observe the instructions of the manufacturer.

CAUTION

Dirt can inhibit transmission of the torque.

- Do not disassemble the shrink disk prior to installation.
- De-grease the machine shaft and the hollow shaft bore leaving no residual traces in the area of the shrink disk seat.

ⓘ Only the exterior surface of the hollow shaft may be greased in the area of the shrink disk seat.

CAUTION

The forces of the shrink disk can deform the hollow shaft.

- Always first install the machine shaft before tightening the clamping screws of the shrink disk.

- Push the hollow shaft onto the machine shaft manually.

CAUTION

A tilting of the shaft can lead to damage.

- Ensure that the hollow shaft is aligned with the machine shaft.
- Mount the hollow shaft onto the machine shaft without using force.
- Do not on any account attempt an assembly by hammering or applying pressure.

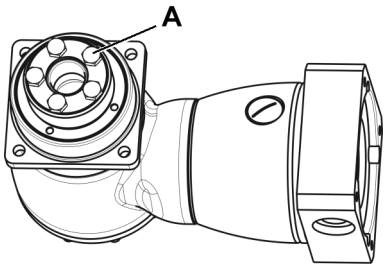

- Tighten the clamping screws (A) of the shrink disk one after another in a single direction (not diagonally crossing) in multiple circular passes.
- Tighten the individual clamping screws only up to the maximum permitted tightening torque.

  ⓘ For screw sizes and specified torques refer to table "Tbl-6".

Gearhead size HG+	Clamping screw thread	Tightening torque [Nm] (for property class 10.9)
060, 075	M6	12
100 to 180	M8	29

Tbl-6: Tightening torque for clamping screw

- Check that the front surfaces of the outer and inner rings are aligned. Only then is the correct braced condition obtained. If this flush alignment is not obtained during bracing, the tolerance of the machine shaft must be checked.

  ⓘ If you want to install a shrink disk that was supplied separately, read the information at chapter 5.4.2 "Installing the shrink disk".

5.4.2 Installing the shrink disk

ⓘ The removed shrink disk does not need to be disassembled and regreased prior to bracing again. It is only necessary to disassemble and clean the shrink disk when it is dirty.

CAUTION

Cleaned shrink disks can have other coefficients of friction. This can lead to damage during mounting.

- Lubricate the inner smooth surfaces of the shrink disk using a solid lubricant with a coefficient of friction of $\mu = 0{,}04$.

ⓘ The following lubricants are permissible for relubricating the shrink disk:

Lubricant	Commercial form	Manufacturer
Molykote 321 R (lubricating varnish)	spray	DOW Corning
Molykote Spray (powder spray)	spray	DOW Corning
Molykote G Rapid	spray or paste	DOW Corning
Aemasol MO 19 P	spray or paste	A. C. Matthes
Molykombin UMFT 1	spray	Klüber Lubrication
Unimoly P 5	powder	Klüber Lubrication

Tbl-7: Lubricants for relubricating the shrink disk

- Push the shrink disk onto the hollow shaft.

ⓘ Only the exterior surface of the hollow shaft may be greased in the area of the shrink disk seat.

- Please observe the instructions in section 5.4.1 "Mounting on the hollow shaft with shrink disk (HG+)".

6 Startup and operation



⚠ WARNING

Objects flung out by rotating components can cause serious injuries.

- Remove objects and tools from the gearhead before putting it into operation.



⚠ WARNING

Rotating components on the gearhead can pull in parts of the body and cause serious injuries and even death.

- Keep a sufficient distance to rotating machinery while the gearhead is running.



CAUTION

Hot gearhead housing can cause serious burns.

- Touch the gearhead housing only when wearing protective gloves or after the gearhead has been at standstill for some time.

Operational conditions and requirements for the surroundings:

- Because of the factory-filled lubricant, the ambient temperature may not lie under 0 °C, or over +40 °C. Operating temperature may not exceed +90 °C.

  ⓘ For other conditions of use, please consult our Customer Service Department.
- Only use the gearhead up to its maximum limit values, see chapter 3.4 "Performance statistics".
- Only use the gearhead in a clean, dust-free and dry environment.

7 Maintenance and disposal



CAUTION

Hot gearhead housing can cause serious burns.

- Touch the housing only when wearing protective gloves or after the gearhead has been at standstill for some time.



WARNING

Rotating components on the gearhead can pull in parts of the body and cause serious injuries and even death.

- Disconnect the machine from the mains before starting maintenance work.
- Secure the motor against restarting during maintenance work.

7.1 Maintenance work

7.1.1 Visual inspection

- Check the entire gearhead for exterior damage.
- The radial shaft seals are subject to wear. Therefore also check the gearhead for leakage during each visual inspection.
  - ⓘ You can find more general information on radial shaft seals on our partner's Internet site at http://www.simrit.de.
  - ⓘ Check the mounting position, so that no foreign medium (e.g. oil) has collected on the output shaft.

7.1.2 Checking the tightening torques

- Check the tightening torque of the fastening bolts on the gearhead housing.
  - ⓘ You can find the prescribed tightening torques in chapter 9.2 "Specifications on mounting onto a machine", table "Tbl-11".
- Check the tightening torque of the clamping bolt on the motor mounting.
  - ⓘ ou can find the prescribed tightening torques in chapter 9.1 "Specifications on mounting onto a motor", table "Tbl-10".

7.2 Startup after maintenance work

- Clean the outside of the gearhead.
- Assemble all safety devices.
- Do a trial run before releasing the gearhead again for operation.

7.3 Maintenance schedule

Maintenance work	At start-up	After 500 operating hours or 3 months	Every 3 months	Yearly
Visual inspection	X	X	X	
Checking the tightening torques	X	X		X

Tbl-8: Maintenance schedule

7.4 Notes on the lubricant used



INFORMATION

All gearheads are permanently lubricated by the manufacturer with synthetic gear oil (polyglycols) of viscosity class ISO VG100, ISO VG220 or with a high-performance lubricant (see type plate). All bearings are permanently lubricated by the company.

You can receive further information on the lubricants directly from the manufacturer:

Castrol Industrie GmbH, Mönchengladbach

Tel.: + 49 (0) 21 61 / 9 09 - 30

7.5 Supplementary information

Consult our Customer Service Department for supplementary information on exchanging the adaptor plate, on disassembly and on disposal of the gearhead.

- Dispose of the gearhead at the recycling sites intended for this purpose.
  ⓘ Observe the locally valid regulations for disposal.

8 Malfunctions



CAUTION

Changed operational behaviour can be an indication of existing damage to the gearhead, or cause damage to the gearhead.

- Do not put the gearhead back into operation until the cause of the malfunction has been rectified.

Fault	Possible cause	Solution
Increased operating temperature	The gearhead is not suited for the task.	Check the technical specifications.
	Motor is heating the gearhead.	Check the wiring of the motor.
		Ensure adequate cooling.
		Change the motor.
	Ambient temperature too high.	Ensure adequate cooling.
Increased noise during operation	Distortion in motor mounting.	Please consult our Customer Service Department.
	Damaged bearings.	
	Damaged gear teeth.	
Loss of lubricant	Lubricant quantity too high.	Wipe off discharged lubricant and continue to watch the gearhead. Lubricant discharge must stop after a short time.
	Seals not tight.	Please consult our Customer Service Department.

Tbl-9: Malfunctions

9 Appendix

9.1 Specifications on mounting onto a motor

Gearhead size HG+		Clamping hub inside Ø "x" [mm]	Clamping bolt / property class DIN 912	Width across flats [mm]	Tightening torque [Nm]	max. axial force [N]	
						Clamping hub	Coupling
060	1–stage	x ≤ 14 14 < x ≤ 19	M5 / 10.9 M6 / 10.9	4 5	8.5 14	—	10
	2–stage	x ≤ 11 11 < x ≤ 14	M4 / 12.9 M5 / 12.9	3 4	4.1 9.5	80	5
075	1–stage	≤ 19 19 < x ≤ 28	M6 / 10.9 M8 / 10.9	5 6	14 35	—	20
	2–stage	x ≤ 14 14 < x ≤ 19	M5 / 12.9 M6 / 12.9	4 5	9.5 16	100	10
100	1–stage	≤ 28 28 < x ≤ 38	M8 / 10.9 M10 / 10.9	6 8	35 69	—	30
	2–stage	x ≤ 19 19 < x ≤ 24	M6 / 12.9 M8 / 12.9	5 6	16 39	120	20
140	1–stage	x ≤ 38	M10 / 10.9	8	69	—	50
	2–stage	x ≤ 24 24 < x ≤ 38	M8 / 12.9 M10 / 12.9	6 8	39 79	150	30
180	1–stage	x ≤ 48	M12 / 10.9	10	86	—	200
	2–stage	x ≤ 38 38 < x ≤ 48	M10 / 12.9 M12 / 12.9	8 10	79 135	200	50

Tbl-10: Specifications on mounting onto a motor

9.2 Specifications on mounting onto a machine

Gearhead size HG+	Bolt circle Ø [mm]	Bore Ø [mm]	Screw size / property class	Tightening torque [Nm]
060	68	5.5	M5 / 12.9	9
075	85	6.6	M6 / 12.9	15.4
100	120	9.0	M8 / 12.9	37.3
140	165	11.0	M10 / 12.9	73.4
180	215	13.0	M12 / 12.9	126

Tbl-11: Specifications on mounting onto a machine

9.3 Tightening torques for common thread sizes in general mechanics

The specified tightening torques for headless screws and nuts are calculated values and are based on the following conditions:

- Calculation acc. VDI 2230 (Issue February 2003)
- Friction value for thread and contact surfaces m = 0.10
- Exploitation of the yield stress 90 %

	Tightening torque [Nm] for threads												
Property class Bolt / nut	**M3**	**M4**	**M5**	**M6**	**M8**	**M10**	**M12**	**M14**	**M16**	**M18**	**M20**	**M22**	**M24**
8.8 / 8	1.15	2.64	5.24	8.99	21.7	42.7	73.5	118	180	258	363	493	625
10.9 / 10	1.68	3.88	7.69	13.2	31.9	62.7	108	173	265	368	516	702	890
12.9 / 12	1.97	4.55	9.00	15.4	37.3	73.4	126	203	310	431	604	821	1042

Tbl-12: Tightening torques for headless screws and nuts