TK⁺/TPK⁺ – New right-angle precision

The successor to our versatile hypoid gearhead with TP⁺ compatible output flange and hollow shaft, with optional planetary stage



TK⁺/TPK⁺

Specifications \ Version	TK⁺/TPK⁺		
	+	++	+++
Positioning accuracy		TK⁺	TPK⁺
Rigidity	TK⁺		TPK⁺
Smooth-running		TK⁺ / TPK⁺	
Speed capacity		TK⁺ / TPK⁺	
Power density	TK⁺		TPK⁺
Max. axial/radial forces		TK⁺	TPK⁺

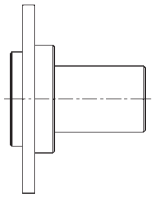

Shaft output



Clamping set



Rack / Pinion

TK⁺ with spindle



Couplings



See our website and our separate flyer for more information about our washdown solutions

Options

Plug-in drive coupling
Washdown version
ATEX version (1-stage)
Food-grade grease

Accessories

Rack / Pinion (see page 294)
Shrink disc (see page 326)
Coupling: BCT (see page 326)
TK⁺ with spindle
Shaft output

The modular principle

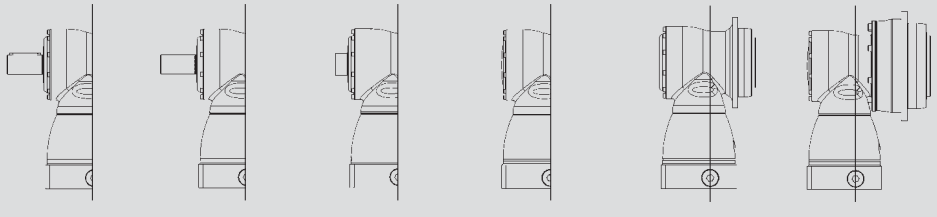

Keyed shaft | Smooth shaft | Hollow shaft interface, Mounted via shrink disc | Closed cover | Flanged hollow shaft

TK+ 004 MF 1/2-stage

					1-stage					2-stage									
Ratio [a]			*i*		**3**	**4**	**5**	**7**	**10**	**12**	**16**	**20**	**25**	**28**	**35**	**40**	**50**	**70**	**100**
Max. acceleration torque (max. 1000 cycles per hour)			T_{2B}	Nm	30	30	30	25	20	30	30	30	30	30	30	30	30	25	20
				in.lb	266	266	266	221	177	266	266	266	266	266	266	266	266	221	177
Nominal output torque (with n_{1N})			T_{2N}	Nm	22	22	22	20	15	22	22	22	22	22	22	22	22	20	15
				in.lb	195	195	195	177	133	195	195	195	195	195	195	195	195	177	133
Emergency stop torque (permitted 1000 times during the service life of the gearhead)			T_{2Not}	Nm	40	50	50	45	40	50	50	50	50	50	50	50	50	45	40
				in.lb	354	443	443	398	354	443	443	443	443	443	443	443	443	398	354
Nominal input speed (with T_{2N} and 20 °C ambient temperature) [b), c)]			n_{1N}	rpm	2200	2400	2700	2700	2700	4400	4400	4400	4400	4400	4400	4400	4800	5500	5500
Max. continuous speed (with 20 % T_{2N} and 20 °C ambient temperature)			n_{1Ncym}	rpm	2700	3100	3600	3100	3100	5000	5000	5000	5000	5000	5000	5000	5000	5500	5500
Max. input speed			n_{1Max}	rpm	6000	6000	6000	6000	6000	6000	6000	6000	6000	6000	6000	6000	6000	6000	6000
Mean no load running torque (with n_1 = 3000 rpm and 20 °C gearhead temperature) [d)]			T_{012}	Nm	1.4	1.3	1.2	1.4	1.3	0.2	0.2	0.2	0.2	0.2	0.2	0.1	0.1	0.1	0.1
				in.lb	12.4	11.5	10.6	12.4	11.5	1.8	1.8	1.8	1.8	1.8	1.8	0.9	0.9	0.9	0.9
Max. torsional backlash			j_t	arcmin	≤ 5														
Torsional rigidity			C_{t21}	Nm/ arcmin	2.6	2.8	3.0	2.6	2.3	2.8	2.8	2.8	2.8	2.8	2.8	2.8	3.0	2.6	2.3
				in.lb/ arcmin	23	25	26	23	20	25	25	25	25	25	25	25	26	23	20
Max. axial force [e)]			F_{2AMax}	N	2400														
				lb_f	540														
Max. radial force [e)]			F_{2RMax}	N	2700														
				lb_f	608														
Max. tilting moment			M_{2KMax}	Nm	251														
				in.lb	2220														
Efficiency at full load			η	%	96					94									
Service life (For calculation, see the Chapter "Information")			L_h	h	> 20000														
Weight incl. standard adapter plate			*m*	kg	2.9					3.2									
				lb_m	6.4					7.1									
Operating noise (with n_1 = 3000 rpm no load)			L_{PA}	dB(A)	≤ 64														
Max. permitted housing temperature				°C	+90														
				F	194														
Ambient temperature				°C	0 to +40														
				F	32 to 104														
Lubrication					Lubricated for life														
Paint					Blue RAL 5002														
Direction of rotation					Motor and gearhead opposite directions														
Protection class					IP 65														
Moment of inertia (relates to the drive) Clamping hub diameter [mm]	B	11	J_1	kgcm²	–	–	–	–	–	0.09	0.09	0.08	0.07	0.06	0.06	0.06	0.06	0.06	0.06
				10^{-3} in.lb.s²						0.08	0.08	0.07	0.07	0.06	0.06	0.05	0.05	0.05	0.05
	C	14	J_1	kgcm²	0.57	0.46	0.41	0.37	0.35	0.21	0.20	0.19	0.19	0.18	0.18	0.17	0.17	0.17	0.17
				10^{-3} in.lb.s²	0.50	0.41	0.36	0.33	0.31	0.18	0.18	0.17	0.16	0.16	0.16	0.15	0.15	0.15	0.15
	E	19	J_1	kgcm²	0.92	0.82	0.76	0.72	0.70	–	–	–	–	–	–	–	–	–	–
				10^{-3} in.lb.s²	0.81	0.72	0.68	0.64	0.62										

Please contact us for information on the best configuration for S1 conditions of use (continuous operation).

[a)] Other ratios available on request
[b)] Higher speeds are possible if the nominal torque is reduced
[c)] For higher ambient temperatures, please reduce input speed
[d)] Idling torques decrease during operation
[e)] Refers to center of the output shaft or flange

All technical data for front output side applies.
Please request information for rear output side versions.

1-stage:

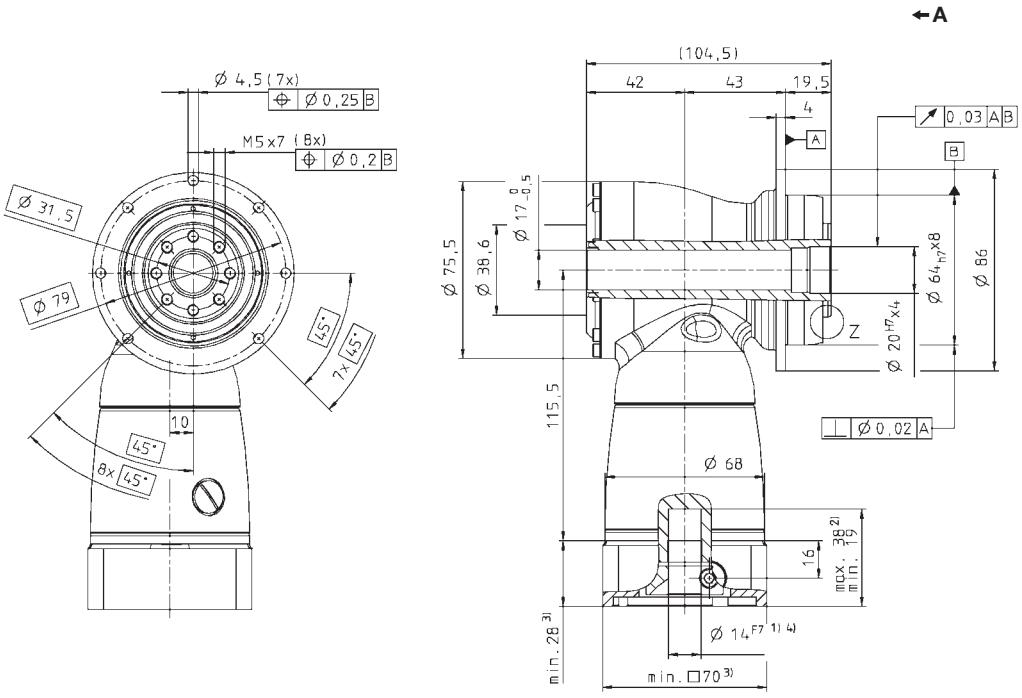

2-stage:

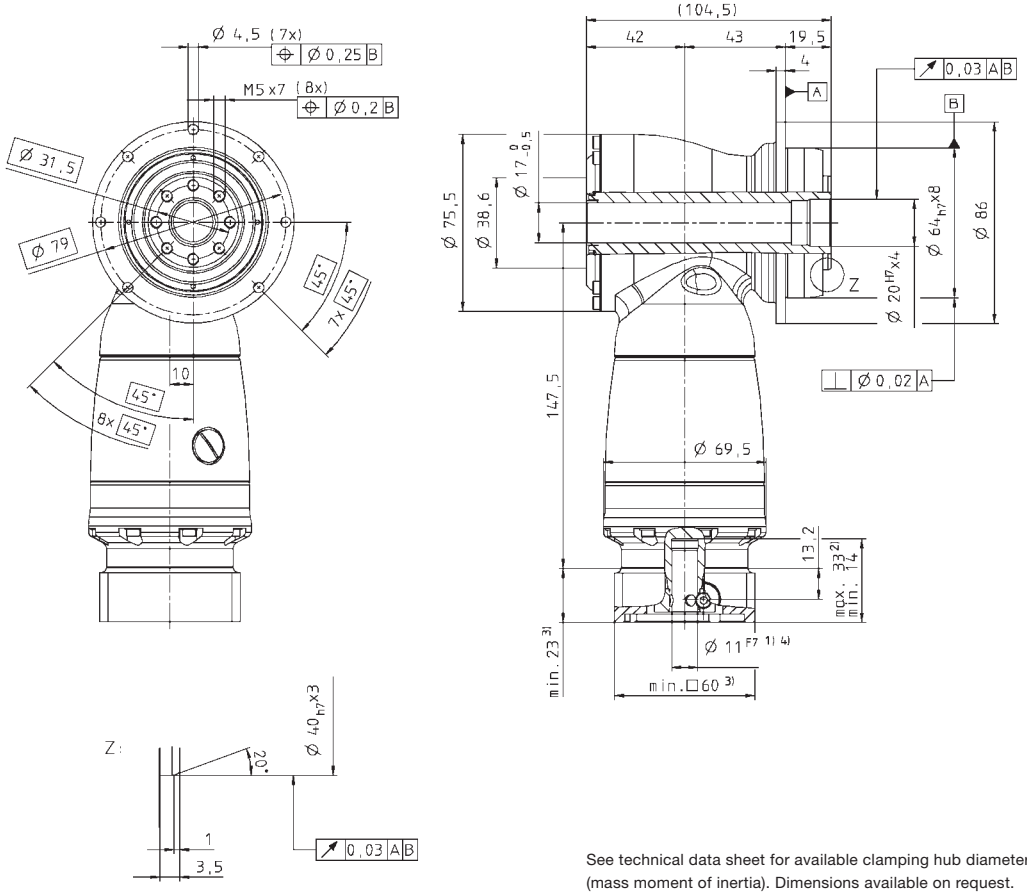

See technical data sheet for available clamping hub diameters (mass moment of inertia). Dimensions available on request.

Non-tolerated dimensions ±1 mm

1) Check motor shaft fit.
2) Min./Max. permissible motor shaft length. Longer motor shafts are adaptable, please contact us.
3) The dimensions depend on the motor.
4) Smaller motor shaft diameter is compensated by a bushing with a minimum thickness of 1 mm.

⚠ Motor mounting according to operating manual

TK+ 010 MF 1/2-stage

					1-stage					2-stage									
Ratio [a]			*i*		**3**	**4**	**5**	**7**	**10**	**12**	**16**	**20**	**25**	**28**	**35**	**40**	**50**	**70**	**100**
Max. acceleration torque (max. 1000 cycles per hour)			T_{2B}	Nm	70	70	70	60	50	70	70	70	70	70	70	70	70	60	50
				in.lb	620	620	620	531	443	620	620	620	620	620	620	620	620	531	443
Nominal output torque (with n_{1N})			T_{2N}	Nm	50	50	50	45	40	50	50	50	50	50	50	50	50	45	40
				in.lb	443	443	443	398	354	443	443	443	443	443	443	443	443	398	354
Emergency stop torque (permitted 1000 times during the service life of the gearhead)			T_{2Not}	Nm	95	115	115	110	100	115	115	115	115	115	115	115	115	110	100
				in.lb	841	1018	1018	974	885	1018	1018	1018	1018	1018	1018	1018	1018	974	885
Nominal input speed (with T_{2N} and 20 °C ambient temperature) [b), c)]			n_{1N}	rpm	2100	2200	2500	2500	2500	3500	3500	3500	3500	3500	3500	3500	3800	4500	4500
Max. continuous speed (with 20 % T_{2N} and 20 °C ambient temperature)			n_{1Ncym}	rpm	2700	3100	3600	3100	3100	4500	4500	4500	4500	4500	4500	4500	4500	4500	4500
Max. input speed			n_{1Max}	rpm	6000	6000	6000	6000	6000	6000	6000	6000	6000	6000	6000	6000	6000	6000	6000
Mean no load running torque (with n_1 = 3000 rpm and 20 °C gearhead temperature) [d)]			T_{012}	Nm	2.4	2.0	1.8	2.4	2.2	0.4	0.4	0.3	0.3	0.3	0.3	0.1	0.1	0.1	0.1
				in.lb	21	18	16	21	19	3.5	3.5	2.7	2.7	2.7	2.7	0.9	0.9	0.9	0.9
Max. torsional backlash			j_t	arcmin	≤ 4														
Torsional rigidity			C_{t21}	Nm/ arcmin	6.0	7.0	8.0	8.0	8.0	7.0	7.0	7.0	7.0	7.0	7.0	7.0	8.0	8.0	8.0
				in.lb/ arcmin	53	62	71	71	71	62	62	62	62	62	62	62	71	71	71
Max. axial force [e)]			F_{2AMax}	N	3400														
				lb_f	765														
Max. radial force [e)]			F_{2RMax}	N	4000														
				lb_f	900														
Max. tilting moment			M_{2KMax}	Nm	437														
				in.lb	3867														
Efficiency at full load			η	%	96					94									
Service life (For calculation, see the Chapter "Information")			L_h	h	> 20000														
Weight incl. standard adapter plate			*m*	kg	5.3					6.1									
				lb_m	11.7					13.5									
Operating noise (with n_1 = 3000 rpm no load)			L_{PA}	dB(A)	≤ 66														
Max. permitted housing temperature				°C	+90														
				F	194														
Ambient temperature				°C	0 to +40														
				F	32 to 104														
Lubrication					Lubricated for life														
Paint					Blue RAL 5002														
Direction of rotation					Motor and gearhead opposite directions														
Protection class					IP 65														
Moment of inertia (relates to the drive) Clamping hub diameter [mm]	C	14	J_1	kgcm²	–	–	–	–	–	0.31	0.28	0.24	0.23	0.21	0.20	0.19	0.18	0.18	0.18
				10^{-3} in.lb.s²						0.27	0.25	0.21	0.21	0.18	0.18	0.17	0.16	0.16	0.16
	E	19	J_1	kgcm²	1.81	1.39	1.18	1.02	0.93	0.75	0.72	0.68	0.68	0.63	0.63	0.63	0.63	0.63	0.63
				10^{-3} in.lb.s²	1.60	1.23	1.05	0.90	0.82	0.64	0.64	0.61	0.60	0.59	0.55	0.56	0.56	0.55	0.55
	H	28	J_1	kgcm²	3.22	2.80	2.60	2.43	2.34	–	–	–	–	–	–	–	–	–	–
				10^{-3} in.lb.s²	2.85	2.48	2.30	2.15	2.07										

Please contact us for information on the best configuration for S1 conditions of use (continuous operation).

[a)] Other ratios available on request
[b)] Higher speeds are possible if the nominal torque is reduced
[c)] For higher ambient temperatures, please reduce input speed
[d)] Idling torques decrease during operation
[e)] Refers to center of the output shaft or flange

All technical data for front output side applies.
Please request information for rear output side versions.

1-stage:

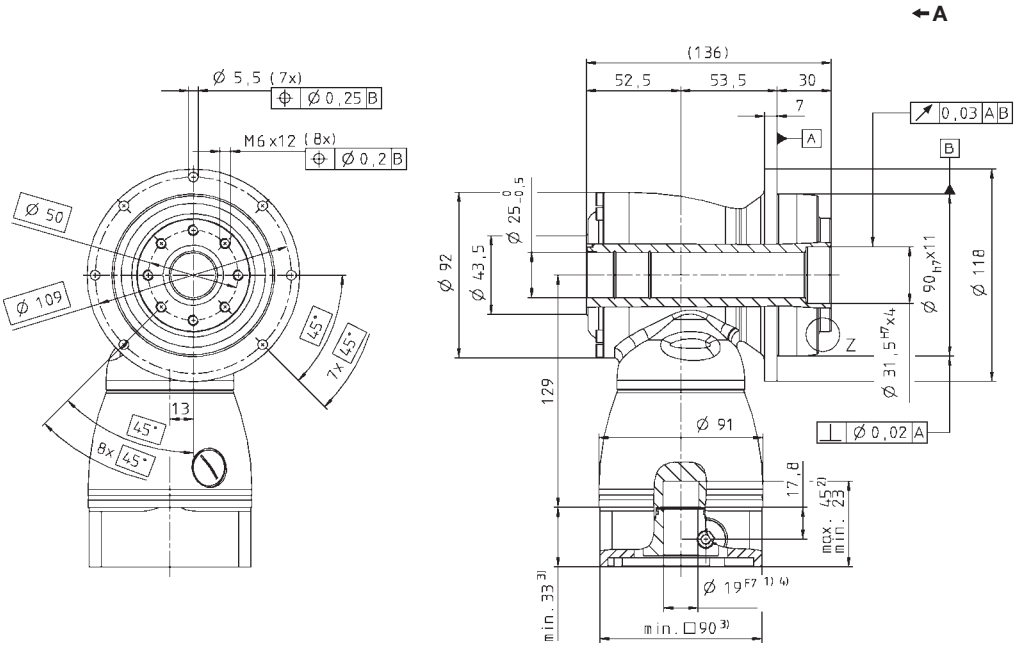

2-stage:

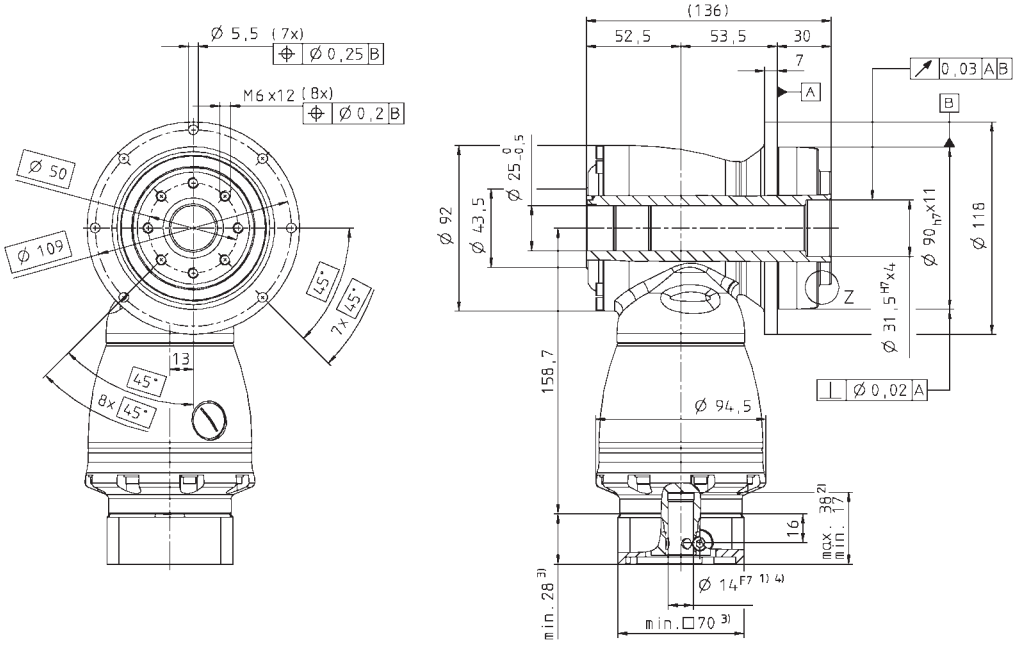

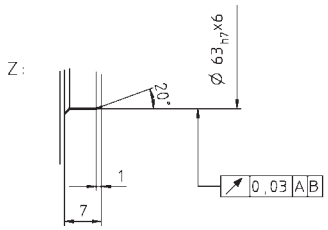

See technical data sheet for available clamping hub diameters (mass moment of inertia). Dimensions available on request.

Non-tolerated dimensions ±1 mm

1) Check motor shaft fit.
2) Min./Max. permissible motor shaft length. Longer motor shafts are adaptable, please contact us.
3) The dimensions depend on the motor.
4) Smaller motor shaft diameter is compensated by a bushing with a minimum thickness of 1 mm.

⚠ Motor mounting according to operating manual

TK+ 025 MF 1/2-stage

					1-stage					2-stage									
Ratio [a]			*i*		**3**	**4**	**5**	**7**	**10**	**12**	**16**	**20**	**25**	**28**	**35**	**40**	**50**	**70**	**100**
Max. acceleration torque (max. 1000 cycles per hour)			T_{2B}	Nm	170	170	170	145	125	170	170	170	170	170	170	170	170	145	125
				in.lb	1505	1505	1505	1283	1106	1505	1505	1505	1505	1505	1505	1505	1505	1283	1106
Nominal output torque (with n_{1N})			T_{2N}	Nm	100	100	100	90	80	100	100	100	100	100	100	100	100	90	80
				in.lb	885	885	885	797	708	885	885	885	885	885	885	885	885	797	708
Emergency stop torque (permitted 1000 times during the service life of the gearhead)			T_{2Not}	Nm	220	260	260	255	250	260	260	260	260	260	260	260	260	255	250
				in.lb	1947	2301	2301	2257	2213	2301	2301	2301	2301	2301	2301	2301	2301	2257	2213
Nominal input speed (with T_{2N} and 20 °C ambient temperature) [b), c)]			n_{1N}	rpm	2000	2100	2400	2200	2200	3100	3100	3100	3100	3100	3100	3100	3500	4200	4200
Max. continuous speed (with 20 % T_{2N} and 20 °C ambient temperature)			n_{1Ncym}	rpm	2700	3000	3400	3000	3000	4000	4000	4000	4000	4000	4000	4000	4000	4200	4200
Max. input speed			n_{1Max}	rpm	4500	4500	4500	4500	4500	4500	4500	4500	4500	4500	4500	4500	4500	4500	4500
Mean no load running torque (with n_1 = 3000 rpm and 20 °C gearhead temperature) [d)]			T_{012}	Nm	4.6	3.6	2.8	4.2	3.4	0.7	0.7	0.6	0.5	0.5	0.4	0.2	0.2	0.2	0.2
				in.lb	41	32	25	37	30	6.2	6.2	5.3	4.4	4.4	3.5	1.8	1.8	1.8	1.8
Max. torsional backlash			j_t	arcmin	≤ 4														
Torsional rigidity			C_{t21}	Nm/ arcmin	12	13	16	16	16	13	13	13	13	13	13	13	16	16	16
				in.lb/ arcmin	106	115	142	142	142	115	115	115	115	115	115	115	142	142	142
Max. axial force [e)]			F_{2AMax}	N	5700														
				lb_f	1283														
Max. radial force [e)]			F_{2RMax}	N	6300														
				lb_f	1418														
Max. tilting moment			M_{2KMax}	Nm	833														
				in.lb	7370														
Efficiency at full load			η	%	96					94									
Service life (For calculation, see the Chapter "Information")			L_h	h	> 20000														
Weight incl. standardadapter plate			*m*	kg	8.9					10.6									
				lb_m	20					23									
Operating noise (with n_1 = 3000 rpm no load)			L_{PA}	dB(A)	≤ 66														
Max. permitted housing temperature				°C	+90														
				F	194														
Ambient temperature				°C	0 to +40														
				F	32 to 104														
Lubrication					Lubricated for life														
Paint					Blue RAL 5002														
Direction of rotation					Motor and gearhead opposite directions														
Protection class					IP 65														
Moment of inertia (relates to the drive) Clamping hub diameter [mm]	E	19	J_1	kgcm²	–	–	–	–	–	1.08	1.01	0.88	0.85	0.76	0.75	0.70	0.69	0.69	0.68
				10^{-3} in.lb.s²						0.96	0.89	0.78	0.75	0.67	0.66	0.62	0.66	0.61	0.60
	G	24	J_1	kgcm²	–	–	–	–	–	2.65	2.57	2.44	2.42	2.32	2.31	2.26	2.25	2.25	2.25
				10^{-3} in.lb.s²						2.34	2.28	2.16	2.14	2.06	2.05	2.00	2.00	1.99	1.99
	H	28	J_1	kgcm²	5.50	4.30	3.60	3.10	2.90	–	–	–	–	–	–	–	–	–	–
				10^{-3} in.lb.s²	4.83	3.77	3.22	2.77	2.54										
	K	38	J_1	kgcm²	12.7	11.5	10.9	10.4	10.1	–	–	–	–	–	–	–	–	–	–
				10^{-3} in.lb.s²	11.2	10.2	9.63	9.19	8.95										

Please contact us for information on the best configuration for S1 conditions of use (continuous operation).

[a)] Other ratios available on request
[b)] Higher speeds are possible if the nominal torque is reduced
[c)] For higher ambient temperatures, please reduce input speed
[d)] Idling torques decrease during operation
[e)] Refers to center of the output shaft or flange

All technical data for front output side applies.
Please request information for rear output side versions.

1-stage:

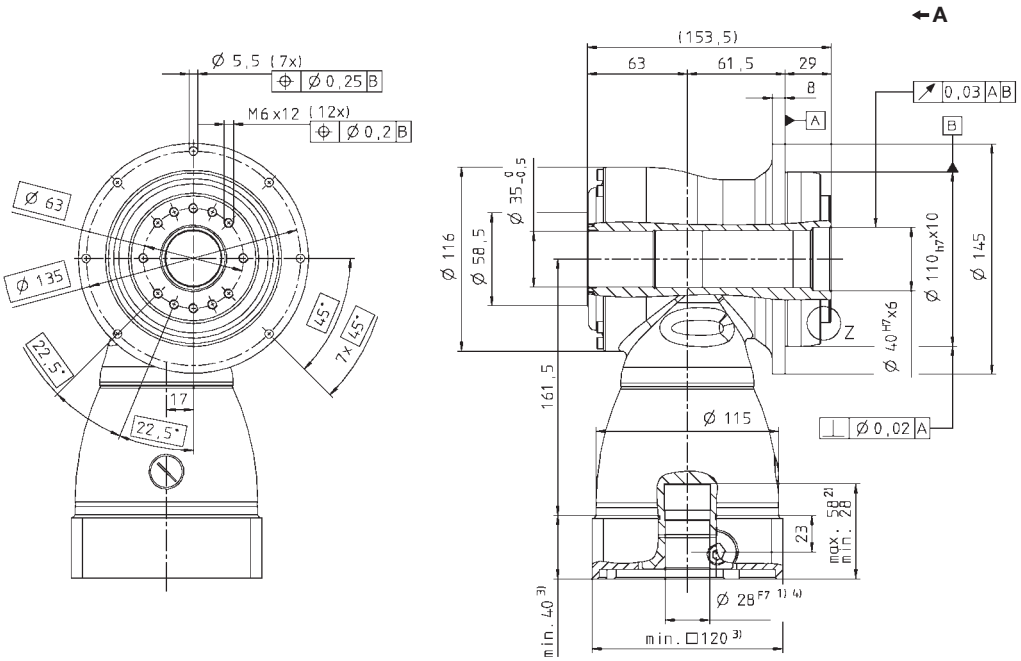

2-stage:

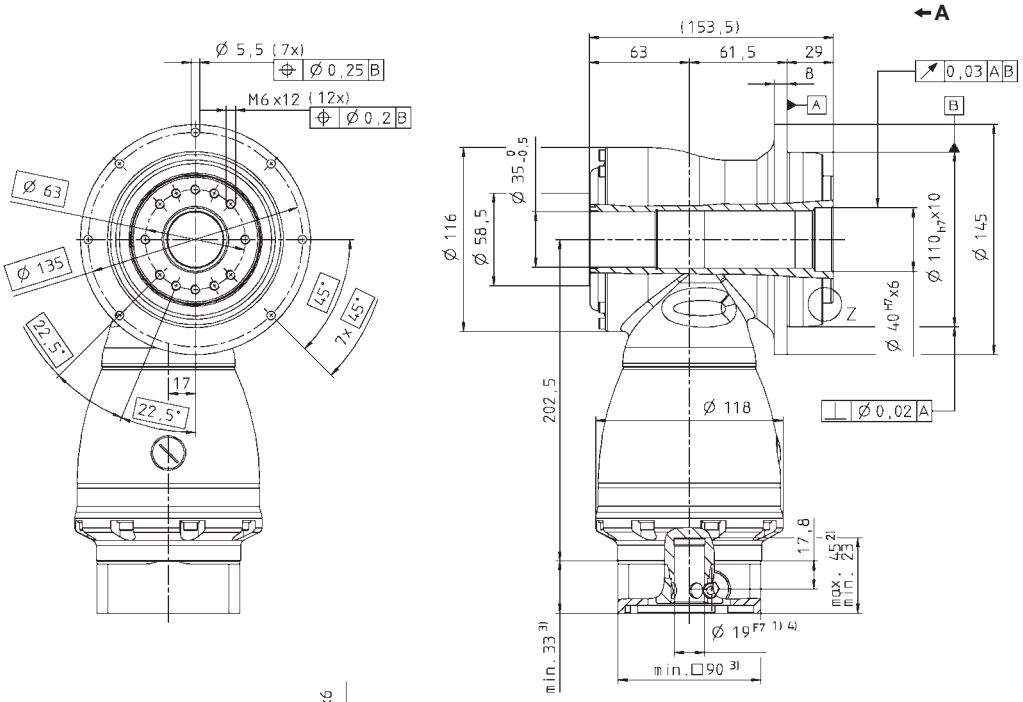

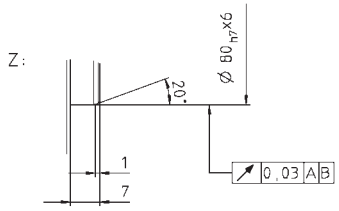

See technical data sheet for available clamping hub diameters (mass moment of inertia). Dimensions available on request.

Non-tolerated dimensions ±1 mm

1) Check motor shaft fit.
2) Min./Max. permissible motor shaft length. Longer motor shafts are adaptable, please contact us.
3) The dimensions depend on the motor.
4) Smaller motor shaft diameter is compensated by a bushing with a minimum thickness of 1 mm.

⚠ Motor mounting according to operating manual

TK+ 050 MF 1/2-stage

				1-stage					2-stage									
Ratio [a]			*i*	**3**	**4**	**5**	**7**	**10**	**12**	**16**	**20**	**25**	**28**	**35**	**40**	**50**	**70**	**100**
Max. acceleration torque (max. 1000 cycles per hour)			T_{2B} Nm	300	300	300	250	210	300	300	300	300	300	300	300	300	250	210
			T_{2B} in.lb	2655	2655	2655	2213	1859	2655	2655	2655	2655	2655	2655	2655	2655	2213	1859
Nominal output torque (with n_{1N})			T_{2N} Nm	190	190	190	175	160	190	190	190	190	190	190	190	190	175	160
			T_{2N} in.lb	1682	1682	1682	1549	1416	1682	1682	1682	1682	1682	1682	1682	1682	1549	1416
Emergency stop torque (permitted 1000 times during the service life of the gearhead)			T_{2Not} Nm	400	500	500	450	400	500	500	500	500	500	500	500	500	450	400
			T_{2Not} in.lb	3540	4425	4425	3983	3540	4425	4425	4425	4425	4425	4425	4425	4425	3983	3540
Nominal input speed (with T_{2N} and 20 °C ambient temperature) [b), c)]			n_{1N} rpm	1700	1800	2000	1800	1800	2900	2900	2900	2900	2900	2900	2900	3200	3200	3900
Max. continuous speed (with 20 % T_{2N} and 20 °C ambient temperature)			n_{1Ncym} rpm	2200	2500	2800	2500	2500	4000	4000	4000	4000	4000	4000	4000	4200	4200	4200
Max. input speed			n_{1Max} rpm	4500	4500	4500	4500	4500	4500	4500	4500	4500	4500	4500	4500	4500	4500	4500
Mean no load running torque (with n_1 = 3000 rpm and 20 °C gearhead temperature) [d)]			T_{012} Nm	8.4	6.2	5.4	9.0	6.6	1.7	1.1	0.8	0.6	0.6	0.5	0.5	0.4	0.4	0.4
			T_{012} in.lb	74	55	48	80	58	15.0	9.7	7.1	5.3	5.3	4.4	4.4	3.5	3.5	3.5
Max. torsional backlash			j_t arcmin	≤ 4														
Torsional rigidity			C_{t21} Nm/ arcmin	36	40	46	44	42	40	40	40	40	40	40	40	46	44	42
			C_{t21} in.lb/ arcmin	315	356	405	387	376	356	356	356	356	356	356	356	405	387	376
Max. axial force [e)]			F_{2AMax} N	9900														
			F_{2AMax} lb_f	2228														
Max. radial force [e)]			F_{2RMax} N	9500														
			F_{2RMax} lb_f	2138														
Max. tilting moment			M_{2KMax} Nm	1692														
			M_{2KMax} in.lb	14974														
Efficiency at full load			η %	96					94									
Service life (For calculation, see the Chapter "Information")			L_h h	> 20000														
Weight incl. standardadapter plate			*m* kg	22					26									
			m lb_m	49					57									
Operating noise (with n_1 = 3000 rpm no load)			L_{PA} dB(A)	≤ 68														
Max. permitted housing temperature			°C	+90														
			F	194														
Ambient temperature			°C	0 to +40														
			F	32 to 104														
Lubrication				Lubricated for life														
Paint				Blue RAL 5002														
Direction of rotation				Motor and gearhead opposite directions														
Protection class				IP 65														
Moment of inertia (relates to the drive)	G	24	J_1 kgcm²	–	–	–	–	–	4.43	3.97	3.36	3.22	2.82	2.75	2.50	2.47	2.44	2.42
			J_1 10^{-3} in.lb.s²						3.92	3.51	2.97	2.85	2.50	2.44	2.22	2.18	2.16	2.14
Clamping hub diameter [mm]	K	38	J_1 kgcm²	28.4	21.0	17.6	14.7	13.1	11.3	10.9	10.3	10.1	9.74	9.66	9.41	9.38	9.35	9.33
			J_1 10^{-3} in.lb.s²	25.1	18.6	15.5	13.0	11.6	10.0	9.63	9.09	8.96	8.62	8.55	8.33	8.30	8.28	8.26

Please contact us for information on the best configuration for S1 conditions of use (continuous operation).

[a)] Other ratios available on request
[b)] Higher speeds are possible if the nominal torque is reduced
[c)] For higher ambient temperatures, please reduce input speed
[d)] Idling torques decrease during operation
[e)] Refers to center of the output shaft or flange

All technical data for front output side applies.
Please request information for rear output side versions.

1-stage:

←A

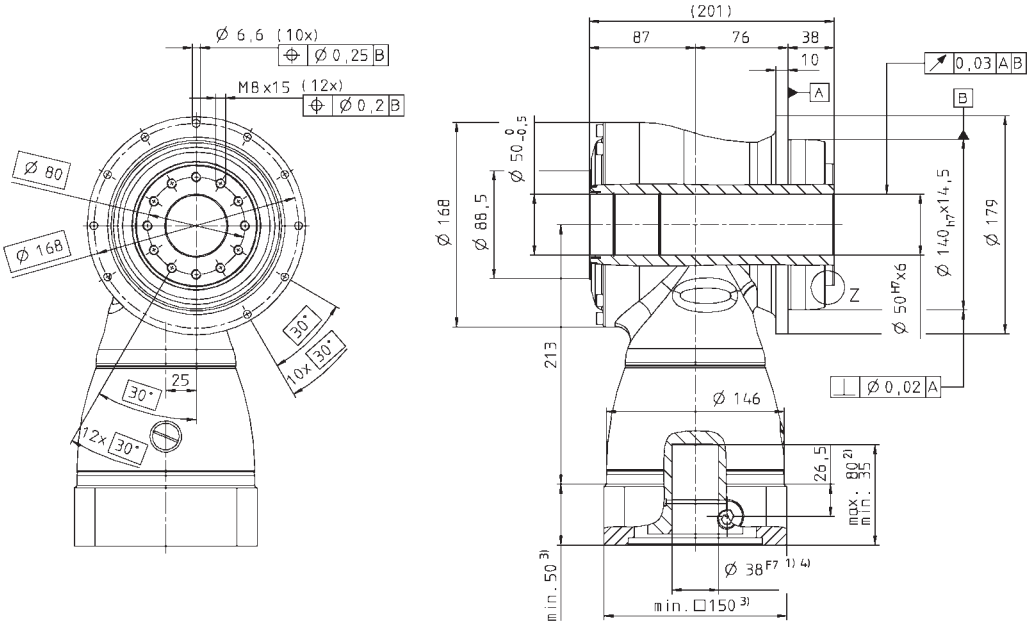

2-stage:

←A

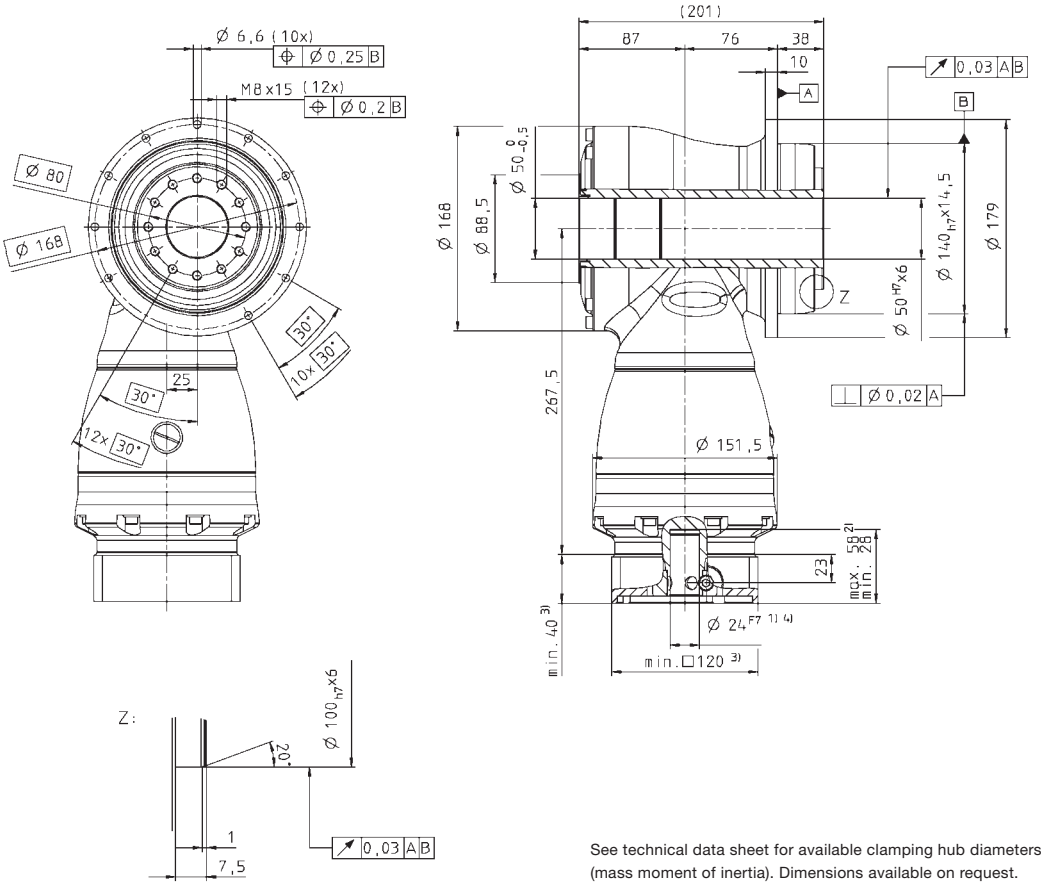

Z:

See technical data sheet for available clamping hub diameters (mass moment of inertia). Dimensions available on request.

Non-tolerated dimensions ±1 mm

1) Check motor shaft fit.
2) Min./Max. permissible motor shaft length. Longer motor shafts are adaptable, please contact us.
3) The dimensions depend on the motor.
4) Smaller motor shaft diameter is compensated by a bushing with a minimum thickness of 1 mm.

⚠ Motor mounting according to operating manual

TK+ 110 MF 1/2-stage

				1-stage					2-stage									
Ratio [a]			***i***	**3**	**4**	**5**	**7**	**10**	**12**	**16**	**20**	**25**	**28**	**35**	**40**	**50**	**70**	**100**
Max. acceleration torque (max. 1000 cycles per hour)			T_{2B} Nm	640	640	640	550	470	640	640	640	640	640	640	640	640	550	470
			T_{2B} in.lb	5664	5664	5664	4868	4160	5664	5664	5664	5664	5664	5664	5664	5664	4868	4160
Nominal output torque (with n_{1N})			T_{2N} Nm	400	400	400	380	360	400	400	400	400	400	400	400	400	380	360
			T_{2N} in.lb	3540	3540	3540	3363	3186	3540	3540	3540	3540	3540	3540	3540	3540	3363	3186
Emergency stop torque (permitted 1000 times during the service life of the gearhead)			T_{2Not} Nm	900	1050	1050	970	900	1050	1050	1050	1050	1050	1050	1050	1050	970	900
			T_{2Not} in.lb	7965	9293	9293	8585	7965	9293	9293	9293	9293	9293	9293	9293	9293	8585	7965
Nominal input speed (with T_{2N} and 20 °C ambient temperature) [b), c)]			n_{1N} rpm	1400	1600	1800	1600	1600	2700	2700	2700	2700	2700	2700	2700	2900	3200	3400
Max. continuous speed (with 20 % T_{2N} and 20 °C ambient temperature)			n_{1Ncym} rpm	1800	2100	2500	2200	2200	3500	3500	3500	3500	3500	3500	3500	3500	3800	3800
Max. input speed			n_{1Max} rpm	4000	4000	4000	4000	4000	4000	4000	4000	4000	4000	4000	4000	4000	4000	4000
Mean no load running torque (with n_1 = 3000 rpm and 20 °C gearhead temperature) [d)]			T_{012} Nm	17.5	14.5	12.0	18.0	15.0	3.6	2.8	2.2	1.9	1.6	1.4	1.1	1.1	1.1	1.1
			T_{012} in.lb	155	128	106	159	133	31.9	24.8	19.5	16.8	14.2	12.4	9.7	9.7	9.7	9.7
Max. torsional backlash			j_t arcmin	≤ 4														
Torsional rigidity			C_{t21} Nm/ arcmin	76	87	99	97	96	87	87	87	87	87	87	87	99	97	96
			C_{t21} in.lb/ arcmin	676	766	874	860	847	766	766	766	766	766	766	766	874	860	847
Max. axial force [e)]			F_{2AMax} N	14200														
			F_{2AMax} lb_f	3195														
Max. radial force [e)]			F_{2RMax} N	14700														
			F_{2RMax} lb_f	3308														
Max. tilting moment			M_{2KMax} Nm	3213														
			M_{2KMax} in.lb	28435														
Efficiency at full load			η %	96					94									
Service life (For calculation, see the Chapter "Information")			L_h h	> 20000														
Weight incl. standardadapter plate			m kg	48					54									
			m lb_m	106					119									
Operating noise (with n_1 = 3000 rpm no load)			L_{PA} dB(A)	≤ 68														
Max. permitted housing temperature			°C	+90														
			F	194														
Ambient temperature			°C	0 to +40														
			F	32 to 104														
Lubrication				Lubricated for life														
Paint				Blue RAL 5002														
Direction of rotation				Motor and gearhead opposite directions														
Protection class				IP 65														
Moment of inertia (relates to the drive) Clamping hub diameter [mm]	K	38	J_1 kgcm²	–	–	–	–	–	16.8	14.8	12.9	12.3	11.2	10.9	10.3	10.1	10.0	9.93
			J_1 10^{-3} in.lb.s²						14.8	13.1	11.4	10.9	9.88	9.63	9.08	8.95	8.84	8.79
	M	48	J_1 kgcm²	96.5	64.6	50.5	38.2	31.8	31.5	29.5	27.6	27.0	25.9	25.6	25.0	24.8	24.7	24.6
			J_1 10^{-3} in.lb.s²	85.4	57.2	44.7	33.8	28.1	27.9	26.1	24.4	23.9	22.9	22.6	22.1	22.0	21.9	21.8

Please contact us for information on the best configuration for S1 conditions of use (continuous operation).

[a)] Other ratios available on request
[b)] Higher speeds are possible if the nominal torque is reduced
[c)] For higher ambient temperatures, please reduce input speed
[d)] Idling torques decrease during operation
[e)] Refers to center of the output shaft or flange

All technical data for front output side applies.
Please request information for rear output side versions.

1-stage:

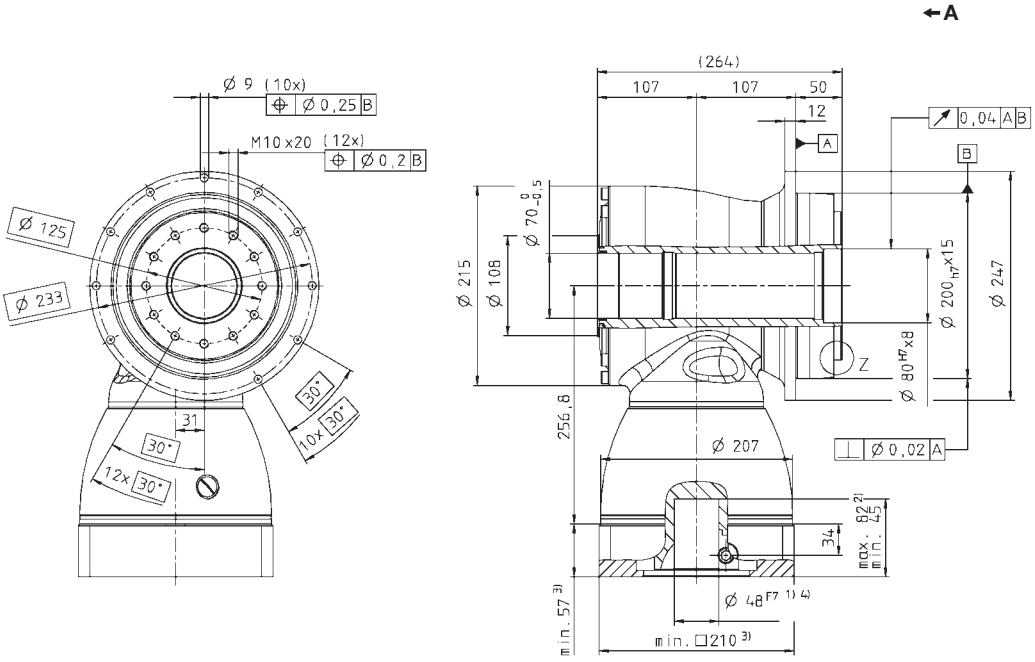

2-stage:

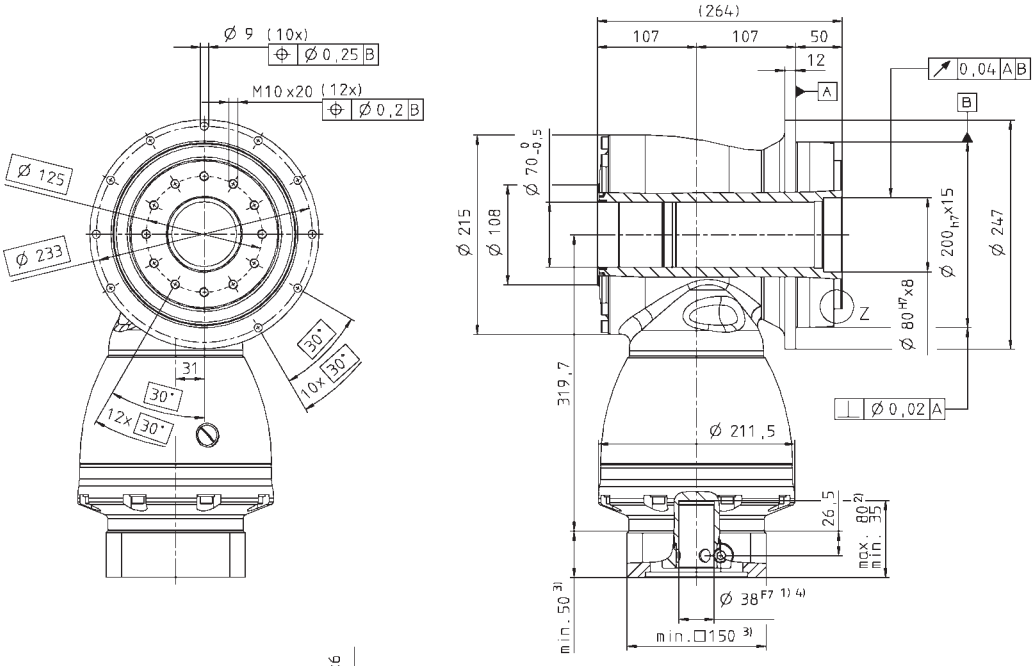

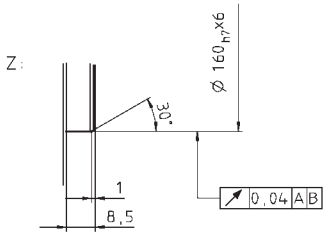

See technical data sheet for available clamping hub diameters (mass moment of inertia). Dimensions available on request.

Non-tolerated dimensions ±1 mm

1) Check motor shaft fit.
2) Min./Max. permissible motor shaft length. Longer motor shafts are adaptable, please contact us.
3) The dimensions depend on the motor.
4) Smaller motor shaft diameter is compensated by a bushing with a minimum thickness of 1 mm.

⚠ Motor mounting according to operating manual

TPK+ 010 MF 2-stage

				2-stage									
Ratio [a]	i			**12**	**16**	**20**	**25**	**28**	**35**	**40**	**49**	**50**	**70**	**100**
Max. acceleration torque (max. 1000 cycles per hour)	T_{2B}		Nm	120	120	130	130	130	130	80	130	100	130	100
			in.lb	1.062	1.062	1.151	1.151	1.151	1.151	708	1.151	885	1.151	885
Nominal output torque (with n_{1N})	T_{2N}		Nm	75	75	75	75	75	75	60	75	75	75	60
			in.lb	664	664	664	664	664	664	531	664	664	664	531
Emergency stop torque (permitted 1000 times during the service life of the gearhead)	T_{2Not}		Nm	160	200	250	250	250	250	160	250	200	250	250
			in.lb	1416	1770	2213	2213	2213	2213	1416	2213	1770	2213	2213
Nominal input speed (with T_{2N} and 20 °C ambient temperature) [b), c)]	n_{1N}		rpm	2000	2400	2400	2700	2400	2500	2500	2500	2500	2500	2500
Max. continuous speed (with 20 % T_{2N} and 20 °C ambient temperature)	n_{1Ncym}		rpm	3000	3400	3400	3800	3400	3200	3200	3200	3200	3200	3200
Max. input speed	n_{1Max}		rpm	6000	6000	6000	6000	6000	6000	6000	6000	6000	6000	6000
Mean no load running torque (with n_1 = 3000 rpm and 20 °C gearhead temperature) [d]	T_{012}		Nm	1.5	1.3	1.2	1.2	1.2	1.3	1.3	1.3	1.3	1.3	1.3
			in.lb	13.3	11.5	10.6	10.6	10.6	11.5	11.5	11.5	11.5	11.5	11.5
Max. torsional backlash	j_t		arcmin	Standard ≤ 5 / Reduced ≤ 3										
Torsional rigidity	C_{t21}		Nm/ arcmin	16	16	20	21	23	24	15	23	19	22	27
			in.lb/ arcmin	142	142	177	186	204	212	133	204	168	195	239
Tilting rigidity	C_{2K}		Nm/ arcmin	225										
			in.lb/ arcmin	1991										
Max. axial force [e]	F_{2AMax}		N	2150										
			lb_f	484										
Max. tilting moment	M_{2KMax}		Nm	235										
			in.lb	2080										
Efficiency at full load	η		%	94										
Service life (For calculation, see the Chapter "Information")	L_h		h	> 20000										
Weight incl. standard adapter plate	m		kg	5.2										
			lb_m	11.5										
Operating noise (with n_1 = 3000 rpm no load)	L_{PA}		dB(A)	≤ 66										
Max. permitted housing temperature			°C	+90										
			F	194										
Ambient temperature			°C	0 to +40										
			F	32 to 104										
Lubrication				Lubricated for life										
Paint				Blue RAL 5002										
Direction of rotation				Motor and gearhead opposite directions										
Protection class				IP 65										
Moment of inertia (relates to the drive) Clamping hub diameter [mm]	C	14	J_1	kgcm²	0.55	0.46	0.44	0.39	0.43	0.36	0.34	0.37	0.34	0.34	0.34
				10^{-3} in.lb.s²	0.49	0.40	0.39	0.35	0.38	0.32	0.30	0.33	0.30	0.30	0.30
	E	19	J	kgcm²	0.90	0.81	0.79	0.75	0.78	0.71	0.70	0.72	0.70	0.69	0.69
				10^{-3} in.lb.s²	0.80	0.72	0.70	0.66	0.69	0.63	0.62	0.64	0.62	0.61	0.61

Please contact us for information on the best configuration for S1 conditions of use (continuous operation).

[a] Other ratios up to i=1000 available on request
[b] Higher speeds are possible if the nominal torque is reduced
[c] For higher ambient temperatures, please reduce input speed
[d] Idling torques decrease during operation
[e] Refers to center of the output shaft or flange

All technical data for front output side applies.
Please request information for rear output side versions.

2-stage:

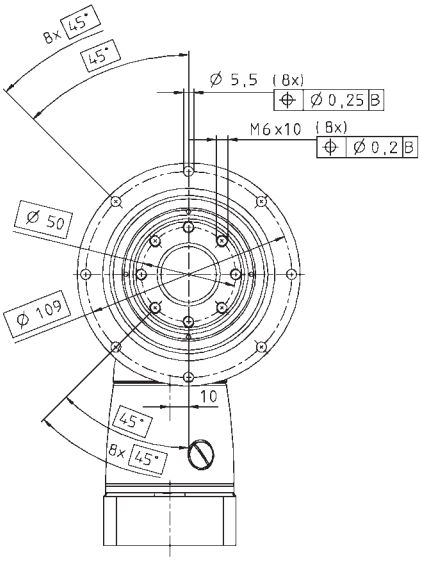

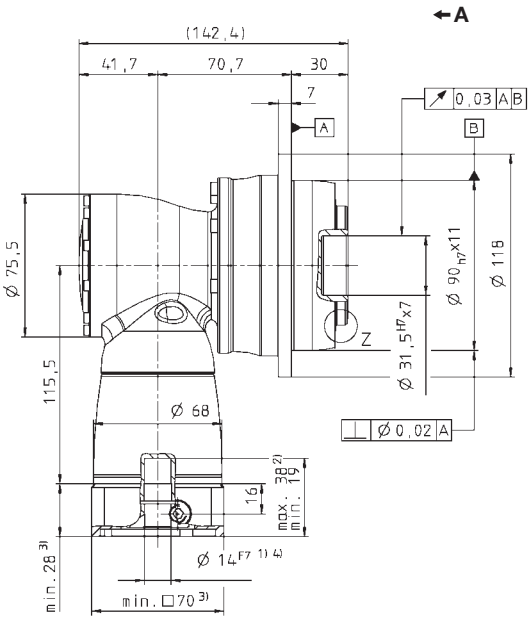

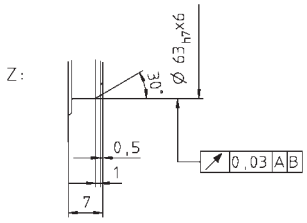

See technical data sheet for available clamping hub diameters (mass moment of inertia). Dimensions available on request.

Non-tolerated dimensions ±1 mm

1) Check motor shaft fit.
2) Min./Max. permissible motor shaft length. Longer motor shafts are adaptable, please contact us.
3) The dimensions depend on the motor.
4) Smaller motor shaft diameter is compensated by a bushing with a minimum thickness of 1 mm.

⚠ Motor mounting according to operating manual

				3-stage													
Ratio [a]			*i*	**64**	**84**	**100**	**125**	**140**	**175**	**200**	**250**	**280**	**350**	**400**	**500**	**700**	**1000**
Max. acceleration torque (max. 1000 cycles per hour)			T_{2B} Nm	120	120	130	130	130	130	130	130	130	130	80	100	130	100
			T_{2B} in.lb	1062	1062	1151	1151	1151	1151	1151	1151	1151	1151	708	885	1151	885
Nominal output torque (with n_{1N})			T_{2N} Nm	85	85	90	90	90	90	90	90	75	90	60	75	90	60
			T_{2N} in.lb	752	752	797	797	797	797	797	797	664	797	531	664	797	531
Emergency stop torque (permitted 1000 times during the service life of the gearhead)			T_{2Not} Nm	200	160	250	250	250	250	250	250	250	250	160	200	250	250
			T_{2Not} in.lb	1770	1416	2213	2213	2213	2213	2213	2213	2213	2213	1416	1770	2213	2213
Nominal input speed (with T_{2N} and 20 °C ambient temperature) [b), c)]			n_{1N} rpm	4400	4400	4400	4400	4400	4400	4400	4800	4400	4800	5500	5500	5500	5500
Max. continuous speed (with 20 % T_{2N} and 20 °C ambient temperature)			n_{1Ncym} rpm	5000	5000	5000	5000	5000	5000	5000	5000	5000	5500	5500	5500	5500	5500
Max. input speed			n_{1Max} rpm	6000	6000	6000	6000	6000	6000	6000	6000	6000	6000	6000	6000	6000	6000
Mean no load running torque (with n_1 = 3000 rpm and 20 °C gearhead temperature) [d)]			T_{012} Nm	0.3	0.3	0.3	0.3	0.3	0.3	0.2	0.2	0.2	0.2	0.2	0.2	0.2	0.2
			T_{012} in.lb	2.7	2.7	2.7	2.7	2.7	2.7	1.8	1.8	1.8	1.8	1.8	1.8	1.8	1.8
Max. torsional backlash			j_t arcmin	Standard ≤ 5 / Reduced ≤ 3													
Torsional rigidity			C_{t21} Nm/ arcmin	16	16	20	21	20	21	20	21	23	24	15	19	22	27
			C_{t21} in.lb/ arcmin	142	142	177	186	177	186	177	186	204	212	133	168	195	239
Tilting rigidity			C_{2K} Nm/ arcmin	225													
			C_{2K} in.lb/ arcmin	1991													
Max. axial force [e)]			F_{2AMax} N	2150													
			F_{2AMax} lb_f	484													
Max. tilting moment			M_{2KMax} Nm	235													
			M_{2KMax} in.lb	2080													
Efficiency at full load			η %	92													
Service life (For calculation, see the Chapter "Information")			L_h h	> 20000													
Weight incl. standard adapter plate			*m* kg	5,5													
			m lb_m	12,2													
Operating noise (with n_1 = 3000 rpm no load)			L_{PA} dB(A)	≤ 66													
Max. permitted housing temperature			°C	90													
			F	194													
Ambient temperature			°C	0 to +40													
			F	32 to 104													
Lubrication				Lubricated for life													
Paint				Blue RAL 5002													
Direction of rotation				Motor and gearhead opposite directions													
Protection class				IP 65													
Moment of inertia (relates to the drive) Clamping hub diameter [mm]	B	11	J_1 kgcm²	0.09	0.07	0.08	0.07	0.06	0.06	0.06	0.06	0.06	0.06	0.06	0.06	0.06	0.06
			J_1 10^{-3} in.lb.s²	0.08	0.06	0.07	0.06	0.05	0.05	0.05	0.05	0.05	0.05	0.05	0.05	0.05	0.05
	C	14	*J* kgcm²	0.20	0.18	0.19	0.19	0.18	0.18	0.17	0.17	0.17	0.17	0.17	0.17	0.17	0.17
			J 10^{-3} in.lb.s²	0.18	0.16	0.17	0.17	0.16	0.16	0.15	0.15	0.15	0.15	0.15	0.15	0.15	0.15

Please contact us for information on the best configuration for S1 conditions of use (continuous operation).

[a)] Other ratios available on request
[b)] Higher speeds are possible if the nominal torque is reduced
[c)] For higher ambient temperatures, please reduce input speed
[d)] Idling torques decrease during operation
[e)] Refers to center of the output shaft or flange

All technical data for front output side applies.
Please request information for rear output side versions.

3-stage:

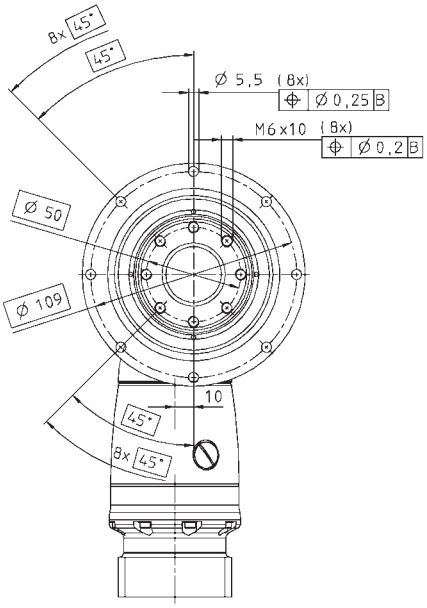

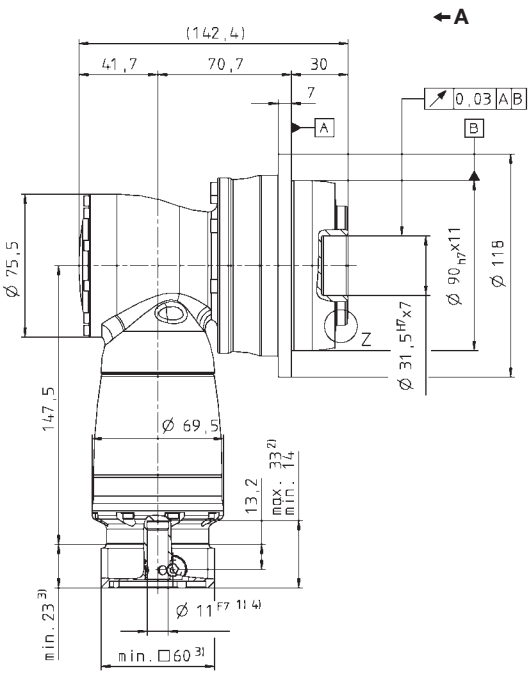

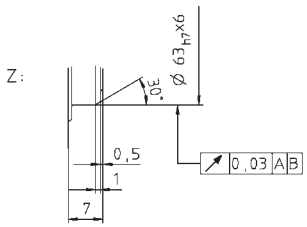

See technical data sheet for available clamping hub diameters (mass moment of inertia). Dimensions available on request.

Non-tolerated dimensions ±1 mm

1) Check motor shaft fit.
2) Min./Max. permissible motor shaft length. Longer motor shafts are adaptable, please contact us.
3) The dimensions depend on the motor.
4) Smaller motor shaft diameter is compensated by a bushing with a minimum thickness of 1 mm.

⚠ Motor mounting according to operating manual

TPK+ 025 MF 2-stage

				2-stage										
Ratio [a]			*i*	**12**	**16**	**20**	**25**	**28**	**35**	**40**	**49**	**50**	**70**	**100**
Max. acceleration torque (max. 1000 cycles per hour)			T_{2B} Nm	280	280	350	350	350	330	330	330	265	400	400
			T_{2B} in.lb	2478	2478	3098	3098	3098	2921	1770	2921	2213	2921	2345
Nominal output torque (with n_{1N})			T_{2N} Nm	170	170	170	170	170	170	160	170	170	170	120
			T_{2N} in.lb	1505	1505	1505	1505	1505	1505	1416	1505	1505	1505	1062
Emergency stop torque (permitted 1000 times during the service life of the gearhead)			T_{2Not} Nm	400	575	575	500	625	625	400	625	500	625	625
			T_{2Not} in.lb	3540	5089	5089	5089	5531	5531	3540	5531	4425	5531	5531
Nominal input speed (with T_{2N} and 20 °C ambient temperature) [b), c)]			n_{1N} rpm	2000	2400	2400	2700	2400	2500	2500	2500	2500	2500	2500
Max. continuous speed (with 20 % T_{2N} and 20 °C ambient temperature)			n_{1Ncym} rpm	3000	3400	3400	3800	3400	3200	3200	3200	3200	3200	3200
Max. input speed			n_{1Max} rpm	6000	6000	6000	6000	6000	6000	6000	6000	6000	6000	6000
Mean no load running torque (with n_1=3000 rpm and 20 °C gearhead temperature) [d)]			T_{012} Nm	2.5	2.1	2.0	1.8	2.0	1.8	2.0	2.2	2.0	2.0	2.0
			T_{012} in.lb	22.1	18.6	17.7	15.9	17.7	15.9	17.7	19.5	17.7	17.7	17.7
Max. torsional backlash			j_t arcmin	Standard ≤ 4 / Reduced ≤ 2										
Torsional rigidity			C_{t21} Nm/ arcmin	40	42	53	55	59	60	44	60	55	60	56
			C_{t21} in.lb/ arcmin	354	372	469	487	522	531	389	531	487	531	496
Tilting rigidity			C_{2K} Nm/ arcmin	550										
			C_{2K} in.lb/ arcmin	4868										
Max. axial force [e)]			F_{2AMax} N	4150										
			F_{2AMax} lb_f	934										
Max. tilting moment			M_{2KMax} Nm	413										
			M_{2KMax} in.lb	3655										
Efficiency at full load			η %	94										
Service life (For calculation, see the Chapter "Information")			L_h h	> 20000										
Weight incl. standard adapter plate			*m* kg	9.0										
			m lb_m	19.9										
Operating noise (with n_1=3000 rpm no load)			L_{PA} dB(A)	≤ 68										
Max. permitted housing temperature			°C	+90										
			F	194										
Ambient temperature			°C	0 to +40										
			F	32 to 104										
Lubrication				Lubricated for life										
Paint				Blue RAL 5002										
Direction of rotation				Motor and gearhead opposite directions										
Protection class				IP 65										
Moment of inertia (relates to the drive) Clamping hub diameter [mm]	E	19	J_1 kgcm²	1.43	1.18	1.16	1.04	1.14	0.94	0.89	0.95	0.89	0.89	0.89
			J_1 10^{-3} in.lb.s²	1.27	1.04	1.02	0.92	1.01	0.83	0.79	0.84	0.79	0.79	0.78
	H	28	J_1 kgcm²	2.85	2.59	2.57	2.45	2.56	2.40	2.31	2.37	2.30	2.30	2.30
			J_1 10^{-3} in.lb.s²	2.52	2.29	2.27	2.17	2.26	2.08	2.04	2.10	2.04	2.04	2.04

Please contact us for information on the best configuration for S1 conditions of use (continuous operation).

[a)] Other ratios up to i=1000 available on request
[b)] Higher speeds are possible if the nominal torque is reduced
[c)] For higher ambient temperatures, please reduce input speed
[d)] Idling torques decrease during operation
[e)] Refers to center of the output shaft or flange

All technical data for front output side applies.
Please request information for rear output side versions.

2-stage:

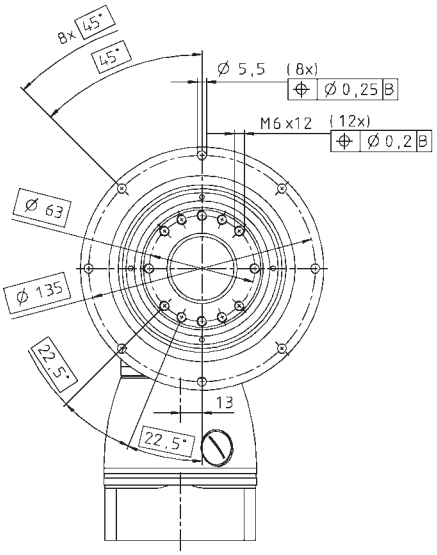

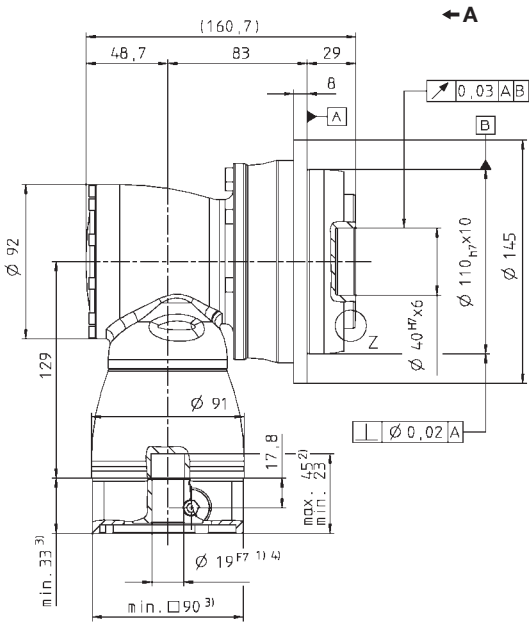

Z:

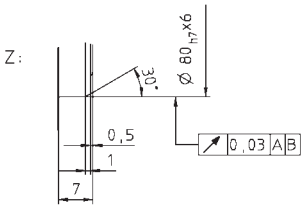

See technical data sheet for available clamping hub diameters (mass moment of inertia). Dimensions available on request.

Non-tolerated dimensions ±1 mm

1) Check motor shaft fit.
2) Min./Max. permissible motor shaft length. Longer motor shafts are adaptable, please contact us.
3) The dimensions depend on the motor.
4) Smaller motor shaft diameter is compensated by a bushing with a minimum thickness of 1 mm.

⚠ Motor mounting according to operating manual

				3-stage													
Ratio [a]	i			**64**	**84**	**100**	**125**	**140**	**175**	**200**	**250**	**280**	**350**	**400**	**500**	**700**	**1000**
Max. acceleration torque (max. 1000 cycles per hour)	T_{2B}		Nm	280	280	350	350	350	350	350	350	350	330	200	250	330	265
			in.lb	2478	2478	3098	3098	3098	3098	3098	3098	3098	2921	1770	2213	2921	2345
Nominal output torque (with n_{1N})	T_{2N}		Nm	200	170	200	200	200	200	200	200	210	200	160	200	200	120
			in.lb	1770	1505	1770	1770	1770	1770	1770	1770	1859	1770	1416	1770	1770	1062
Emergency stop torque (permitted 1000 times during the service life of the gearhead)	T_{2Not}		Nm	460	400	575	575	575	575	575	575	625	625	400	500	625	625
			in.lb	4071	3540	5089	5089	5089	5089	5089	5089	5531	5531	3540	4425	5531	5531
Nominal input speed (with T_{2N} and 20 °C ambient temperature) [b), c)]	n_{1N}		rpm	3500	3500	3500	3500	3500	3500	3500	3800	3500	3800	4500	4500	4500	4500
Max. continuous speed (with 20 % T_{2N} and 20 °C ambient temperature)	n_{1Ncym}		rpm	4500	4500	4500	4500	4500	4500	4500	4500	4500	4500	4500	4500	4500	4500
Max. input speed	n_{1Max}		rpm	6000	6000	6000	6000	6000	6000	6000	6000	6000	6000	6000	6000	6000	6000
Mean no load running torque (with n_1 = 3000 rpm and 20 °C gearhead temperature) [d)]	T_{012}		Nm	0.4	0.3	0.3	0.3	0.3	0.3	0.2	0.2	0.2	0.2	0.2	0.2	0.2	0.2
			in.lb	3.5	2.7	2.7	2.7	2.7	2.7	1.8	1.8	1.8	1.8	1.8	1.8	1.8	1.8
Max. torsional backlash	j_t		arcmin	Standard ≤ 4 / Reduced ≤ 2													
Torsional rigidity	C_{t21}		Nm/ arcmin	42	40	53	55	53	55	53	55	59	60	44	55	60	56
			in.lb/ arcmin	372	354	469	487	469	487	469	487	522	531	389	487	531	496
Tilting rigidity	C_{2K}		Nm/ arcmin	550													
			in.lb/ arcmin	4868													
Max. axial force [e)]	F_{2AMax}		N	4150													
			lb_f	934													
Max. tilting moment	M_{2KMax}		Nm	413													
			in.lb	3655													
Efficiency at full load	η		%	92													
Service life (For calculation, see the Chapter "Information")	L_h		h	> 20000													
Weight incl. standard adapter plate	m		kg	9,8													
			lb_m	21,7													
Operating noise (with n_1 = 3000 rpm no load)	L_{PA}		dB(A)	≤ 68													
Max. permitted housing temperature			°C	90													
			F	194													
Ambient temperature			°C	0 to +40													
			F	32 to 104													
Lubrication				Lubricated for life													
Paint				Blue RAL 5002													
Direction of rotation				Motor and gearhead opposite directions													
Protection class				IP 65													
Moment of inertia (relates to the drive) Clamping hub diameter [mm]	C	14	J_1	kgcm²	0.28	0.23	0.24	0.23	0.21	0.20	0.19	0.18	0.19	0.18	0.18	0.18	0.18	0.18
				10^{-3} in.lb.s²	0.25	0.20	0.21	0.20	0.19	0.18	0.17	0.16	0.17	0.16	0.16	0.16	0.16	0.16
	E	19	J	kgcm²	0.72	0.63	0.68	0.68	0.63	0.63	0.63	0.63	0.63	0.63	0.63	0.63	0.63	0.63
				10^{-3} in.lb.s²	0.64	0.56	0.60	0.60	0.56	0.56	0.56	0.56	0.56	0.56	0.56	0.56	0.56	0.56

Please contact us for information on the best configuration for S1 conditions of use (continuous operation).

[a)] Other ratios available on request
[b)] Higher speeds are possible if the nominal torque is reduced
[c)] For higher ambient temperatures, please reduce input speed
[d)] Idling torques decrease during operation
[e)] Refers to center of the output shaft or flange

All technical data for front output side applies.
Please request information for rear output side versions.

3-stage:

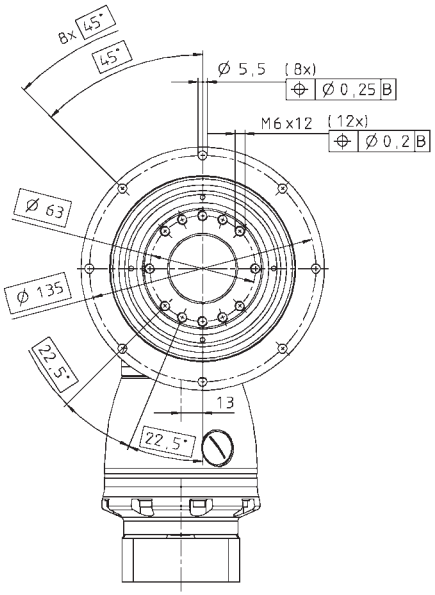

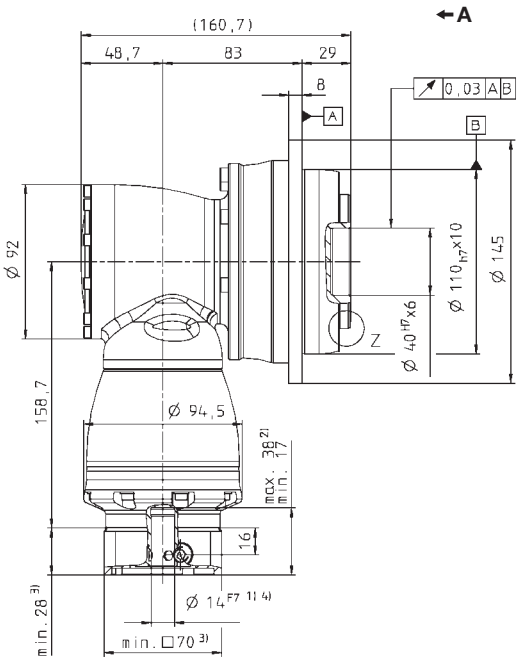

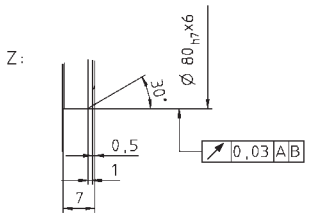

See technical data sheet for available clamping hub diameters (mass moment of inertia). Dimensions available on request.

Non-tolerated dimensions ±1 mm

1) Check motor shaft fit.
2) Min./Max. permissible motor shaft length. Longer motor shafts are adaptable, please contact us.
3) The dimensions depend on the motor.
4) Smaller motor shaft diameter is compensated by a bushing with a minimum thickness of 1 mm.

⚠ Motor mounting according to operating manual

TPK+ 050 MF 2-stage

				2-stage										
Ratio [a]			*i*	**12**	**16**	**20**	**25**	**28**	**35**	**40**	**49**	**50**	**70**	**100**
Max. acceleration torque (max. 1000 cycles per hour)			T_{2B} Nm	680	680	750	750	700	700	500	700	625	700	540
			T_{2B} in.lb	6018	6018	6638	6638	6195	6416	4425	6195	5531	6195	4779
Nominal output torque (with n_{1N})			T_{2N} Nm	370	370	370	370	370	370	320	370	370	370	240
			T_{2N} in.lb	3275	3275	3275	3275	3275	3275	2832	3275	3275	3275	2124
Emergency stop torque (permitted 1000 times during the service life of the gearhead)			T_{2Not} Nm	1000	1000	1250	1250	1250	1250	1000	1250	1250	1250	1250
			T_{2Not} in.lb	8850	8850	11063	11063	11063	11063	8850	11063	11063	11063	11063
Nominal input speed (with T_{2N} and 20 °C ambient temperature) [b), c)]			n_{1N} rpm	1900	2300	2300	2600	2300	2300	2300	2300	2300	2300	2300
Max. continuous speed (with 20 % T_{2N} and 20 °C ambient temperature)			n_{1Ncym} rpm	2700	3100	3100	3500	3100	3000	3000	3000	3000	3000	3000
Max. input speed			n_{1Max} rpm	4500	4500	4500	4500	4500	4500	4500	4500	4500	4500	4500
Mean no load running torque (with n_1=3000 rpm and 20 °C gearhead temperature) [d)]			T_{012} Nm	4.0	3.7	3.6	2.8	3.5	2.8	3.1	3.9	3.1	3.1	3.1
			T_{012} in.lb	35.4	32.7	31.9	24.8	31.0	24.8	27.4	34.5	27.4	27.4	27.4
Max. torsional backlash			j_t arcmin	Standard ≤ 4 / Reduced ≤ 2										
Torsional rigidity			C_{t21} Nm/ arcmin	87	91	111	119	123	127	96	127	115	125	112
			C_{t21} in.lb/ arcmin	770	805	982	1053	1089	1124	850	1124	1018	1106	991
Tilting rigidity			C_{2K} Nm/ arcmin	560										
			C_{2K} in.lb/ arcmin	4956										
Max. axial force [e)]			F_{2AMax} N	6130										
			F_{2AMax} lb_f	1379										
Max. tilting moment			M_{2KMax} Nm	1295										
			M_{2KMax} in.lb	11461										
Efficiency at full load			η %	94										
Service life (For calculation, see the Chapter "Information")			L_h h	> 20000										
Weight incl. standard adapter platee			m kg	17.0										
			m lb_m	38										
Operating noise (with n_1=3000 rpm no load)			L_{PA} dB(A)	≤ 68										
Max. permitted housing temperature			°C	+90										
			F	194										
Ambient temperature			°C	0 to +40										
			F	32 to 104										
Lubrication				Lubricated for life										
Paint				Blue RAL 5002										
Direction of rotation				Motor and gearhead opposite directions										
Protection class				IP 65										
Moment of inertia (relates to the drive) Clamping hub diameter [mm]	H	28	J_1 kgcm²	4.56	3.76	3.71	3.28	3.66	3.00	2.79	3.10	2.78	2.77	2.77
			J_1 10^{-3} in.lb.s²	4.04	3.32	3.28	2.90	3.24	2.61	2.47	2.74	2.46	2.45	2.45
	K	38	J_1 kgcm²	11.7	10.9	10.9	10.4	10.8	10.3	9.95	10.4	9.94	9.94	9.93
			J_1 10^{-3} in.lb.s²	10.38	9.67	9.62	9.24	9.58	8.96	8.81	9.20	8.80	8.80	8.79

Please contact us for information on the best configuration for S1 conditions of use (continuous operation).

[a)] Other ratios up to i=1000 available on request
[b)] Higher speeds are possible if the nominal torque is reduced
[c)] For higher ambient temperatures, please reduce input speed
[d)] Idling torques decrease during operation
[e)] Refers to center of the output shaft or flange

All technical data for front output side applies.
Please request information for rear output side versions.

2-stage:

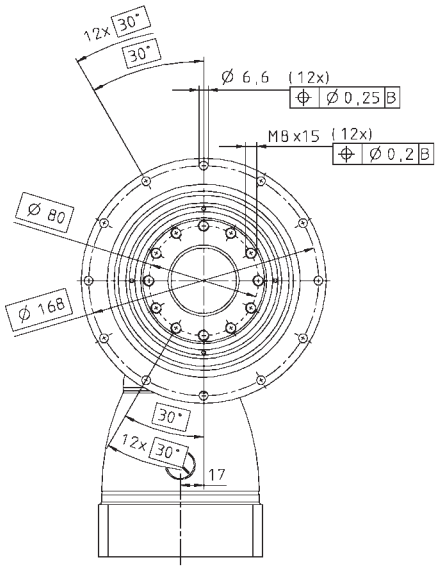

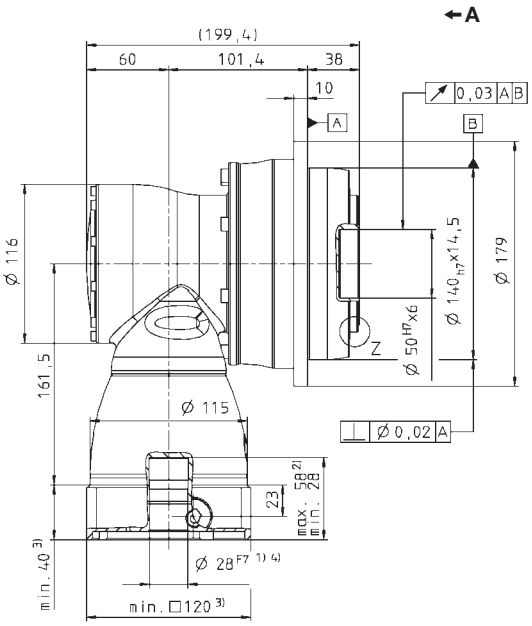

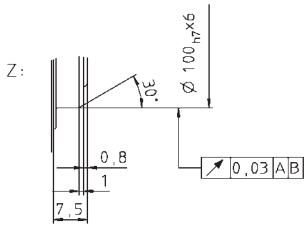

See technical data sheet for available clamping hub diameters (mass moment of inertia). Dimensions available on request.

Non-tolerated dimensions ±1 mm

1) Check motor shaft fit.
2) Min./Max. permissible motor shaft length. Longer motor shafts are adaptable, please contact us.
3) The dimensions depend on the motor.
4) Smaller motor shaft diameter is compensated by a bushing with a minimum thickness of 1 mm.

⚠ Motor mounting according to operating manual

TPK+ 050 MF 3-stage

				3-stage													
Ratio [a]			*i*	**64**	**84**	**100**	**125**	**140**	**175**	**200**	**250**	**280**	**350**	**400**	**500**	**700**	**1000**
Max. acceleration torque (max. 1000 cycles per hour)			T_{2B} Nm	680	680	750	750	750	750	750	750	700	700	500	625	700	540
			T_{2B} in.lb	6018	6018	6638	6638	6638	6638	6638	6638	6195	6195	4425	5531	6195	4779
Nominal output torque (with n_{1N})			T_{2N} Nm	400	400	400	400	400	400	400	400	400	400	320	370	400	240
			T_{2N} in.lb	3540	3540	3540	3540	3540	3540	3540	3540	3540	3540	2832	3275	3540	2124
Emergency stop torque (permitted 1000 times during the service life of the gearhead)			T_{2Not} Nm	1000	1000	1250	1250	1250	1250	1250	1250	1250	1250	1000	1250	1250	1250
			T_{2Not} in.lb	8850	8850	11063	11063	11063	11063	11063	11063	11063	11063	8850	11063	11063	11063
Nominal input speed (with T_{2N} and 20 °C ambient temperature) [b), c)]			n_{1N} rpm	3100	3100	3100	3100	3100	3100	3100	3500	3100	3500	4200	4200	4200	4200
Max. continuous speed (with 20 % T_{2N} and 20 °C ambient temperature)			n_{1Ncym} rpm	4000	4000	4000	4000	4000	4000	4000	4000	4000	4000	4200	4200	4200	4200
Max. input speed			n_{1Max} rpm	4500	4500	4500	4500	4500	4500	4500	4500	4500	4500	4500	4500	4500	4500
Mean no load running torque (with n_1 = 3000 rpm and 20 °C gearhead temperature) [d)]			T_{012} Nm	0.7	0.4	0.6	0.5	0.5	0.4	0.3	0.3	0.3	0.3	0.3	0.3	0.3	0.3
			T_{012} in.lb	6.2	3.5	5.3	4.4	4.4	3.5	2.7	2.7	2.7	2.7	2.7	2.7	2.7	2.7
Max. torsional backlash			j_t arcmin	Standard ≤ 4 / Reduced ≤ 2													
Torsional rigidity			C_{t21} Nm/ arcmin	91	87	111	119	111	119	111	119	123	127	95	115	125	112
			C_{t21} in.lb/ arcmin	805	770	982	1053	982	1053	982	1053	1089	1124	841	1018	1106	991
Tilting rigidity			C_{2K} Nm/ arcmin	560													
			C_{2K} in.lb/ arcmin	4956													
Max. axial force [e)]			F_{2AMax} N	6130													
			F_{2AMax} lb_f	1379													
Max. tilting moment			M_{2KMax} Nm	1295													
			M_{2KMax} in.lb	11461													
Efficiency at full load			η %	92													
Service life (For calculation, see the Chapter "Information")			L_h h	> 20000													
Weight incl. standard adapter plate			m kg	18,7													
			m lb_m	41,3													
Operating noise (with n_1 = 3000 rpm no load)			L_{PA} dB(A)	< 68													
Max. permitted housing temperature			°C	90													
			F	194													
Ambient temperature			°C	0 to +40													
			F	32 to 104													
Lubrication				Lubricated for life													
Paint				Blue RAL 5002													
Direction of rotation				Motor and gearhead opposite directions													
Protection class				IP 65													
Moment of inertia (relates to the drive) Clamping hub diameter [mm]	E	19	J_1 kgcm²	1.01	0.76	0.88	0.85	0.76	0.75	0.70	0.69	0.70	0.69	0.69	0.69	0.69	0.69
			J_1 10^{-3} in.lb.s²	0.89	0.67	0.78	0.75	0.67	0.66	0.62	0.61	0.62	0.61	0.61	0.61	0.61	0.61
	G	24	J_1 kgcm²	2.57	2.32	2.44	2.42	2.32	2.31	2.26	2.25	2.26	2.25	2.25	2.25	2.25	2.25
			J_1 10^{-3} in.lb.s²	2.27	2.05	2.16	2.14	2.05	2.04	2.00	1.99	2.00	1.99	1.99	1.99	1.99	1.99

Please contact us for information on the best configuration for S1 conditions of use (continuous operation).

[a)] Other ratios available on request
[b)] Higher speeds are possible if the nominal torque is reduced
[c)] For higher ambient temperatures, please reduce input speed
[d)] Idling torques decrease during operation
[e)] Refers to center of the output shaft or flange

All technical data for front output side applies.
Please request information for rear output side versions.

3-stage:

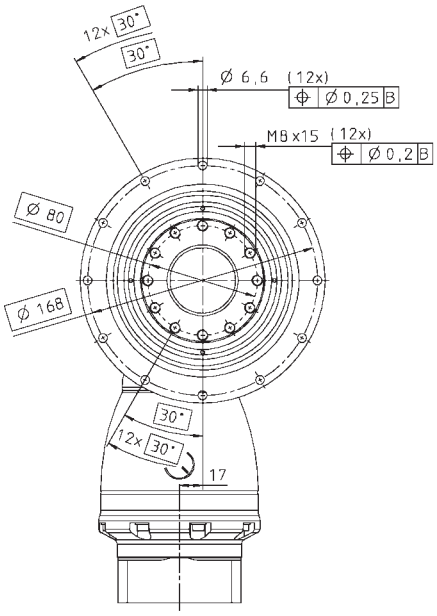

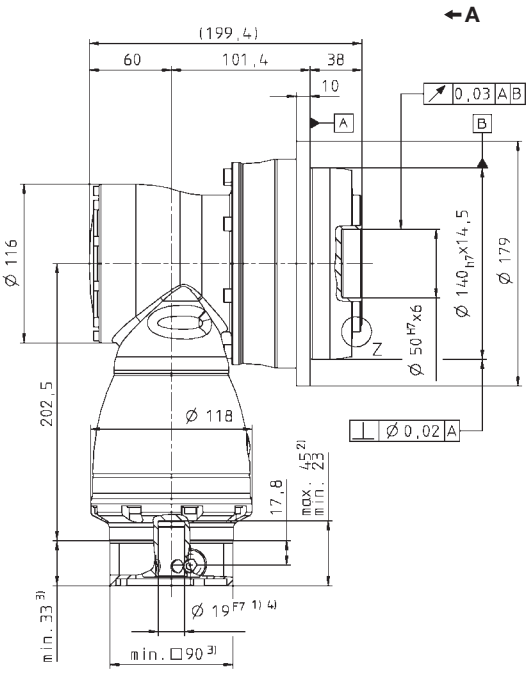

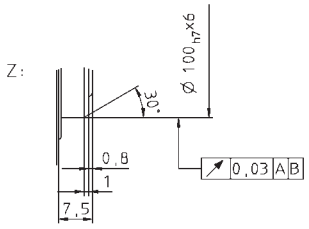

See technical data sheet for available clamping hub diameters (mass moment of inertia). Dimensions available on request.

Non-tolerated dimensions ±1 mm

1) Check motor shaft fit.
2) Min./Max. permissible motor shaft length. Longer motor shafts are adaptable, please contact us.
3) The dimensions depend on the motor.
4) Smaller motor shaft diameter is compensated by a bushing with a minimum thickness of 1 mm.

⚠ Motor mounting according to operating manual

TPK+ 110 MF 2-stage

				2-stage										
Ratio [a]			*i*	**12**	**16**	**20**	**25**	**28**	**35**	**40**	**49**	**50**	**70**	**100**
Max. acceleration torque (max. 1000 cycles per hour)			T_{2B} Nm	1200	1200	1500	1500	1600	1600	840	1600	1050	1470	1400
			in.lb	10620	10620	13275	13275	14160	14160	7434	14160	9293	13010	12390
Nominal output torque (with n_{1N})			T_{2N} Nm	700	700	750	750	750	750	640	750	750	750	750
			in.lb	6195	6195	6638	6638	6638	6638	5664	6638	6638	6638	6638
Emergency stop torque (permitted 1000 times during the service life of the gearhead)			T_{2Not} Nm	1600	2000	2500	2500	2750	2750	1600	2750	2000	2750	2750
			in.lb	14160	17700	22125	22125	24338	24338	14160	24338	17700	24338	24338
Nominal input speed (with T_{2N} and 20 °C ambient temperature) [b), c)]			n_{1N} rpm	1600	1900	1900	2100	1900	2100	2100	2100	2100	2100	2100
Max. continuous speed (with 20 % T_{2N} and 20 °C ambient temperature)			n_{1Ncym} rpm	2300	2600	2600	2800	2600	3000	3000	3000	3000	3000	3000
Max. input speed			n_{1Max} rpm	4500	4500	4500	4500	4500	4500	4500	4500	4500	4500	4500
Mean no load running torque (with n_1 = 3000 rpm and 20 °C gearhead temperature) [d)]			T_{012} Nm	9.0	6.5	6.5	5.5	6.0	6.0	6.0	8.0	6.0	6.0	6.0
			in.lb	79.7	57.5	57.5	48.7	53.1	53.1	53.1	70.8	53.1	53.1	53.1
Max. torsional backlash			j_t arcmin	Standard ≤ 4 / Reduced ≤ 2										
Torsional rigidity			C_{t21} Nm/ arcmin	253	269	336	346	400	407	274	410	341	404	389
			in.lb/ arcmin	2239	2381	2974	3062	3540	3602	2425	3629	3018	3575	3443
Tilting rigidity			C_{2K} Nm/ arcmin	1452										
			in.lb/ arcmin	12850										
Max. axial force [e)]			F_{2AMax} N	10050										
			lb_f	2261										
Max. tilting moment			M_{2KMax} Nm	3064										
			in.lb	27116										
Efficiency at full load			η %	94										
Service life (For calculation, see the Chapter "Information")			L_h h	> 20000										
Weight incl. standard adapter plate			*m* kg	41.0										
			lb_m	91										
Operating noise (with n_1 = 3000 rpm no load)			L_{PA} dB(A)	≤ 70										
Max. permitted housing temperature			°C	+90										
			F	194										
Ambient temperature			°C	0 to +40										
			F	32 to 104										
Lubrication				Lubricated for life										
Paint				Blue RAL 5002										
Direction of rotation				Motor and gearhead opposite directions										
Protection class				IP 65										
Moment of inertia (relates to the drive)	K	38	J_1 kgcm²	24.3	19.0	18.7	16.1	18.5	15.7	12.8	17.5	12.7	12.7	12.7
Clamping hub diameter [mm]			10^{-3} in.lb.s²	21.5	16.8	16.6	14.2	16.4	12.3	11.3	15.5	11.3	11.2	11.2

Please contact us for information on the best configuration for S1 conditions of use (continuous operation).

[a)] Other ratios up to i=1000 available on request
[b)] Higher speeds are possible if the nominal torque is reduced
[c)] For higher ambient temperatures, please reduce input speed
[d)] Idling torques decrease during operation
[e)] Refers to center of the output shaft or flange

All technical data for front output side applies.
Please request information for rear output side versions.

2-stage:

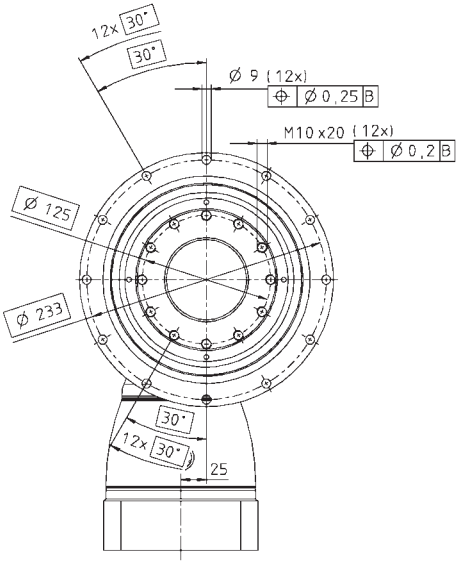

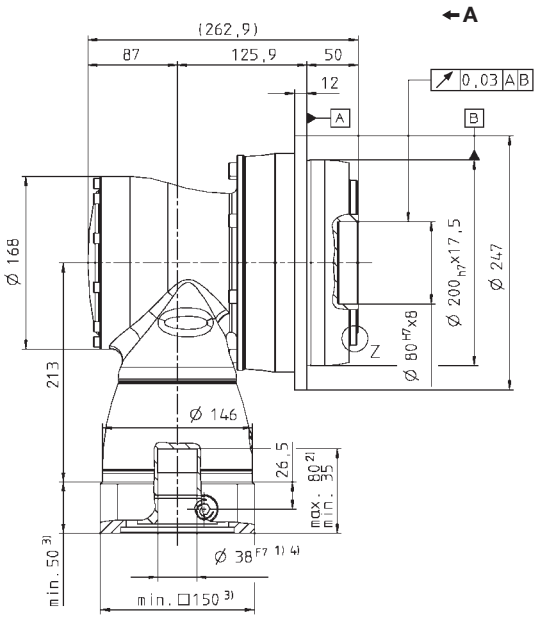

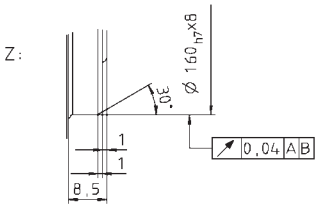

See technical data sheet for available clamping hub diameters (mass moment of inertia). Dimensions available on request.

Non-tolerated dimensions ±1 mm

1) Check motor shaft fit.
2) Min./Max. permissible motor shaft length. Longer motor shafts are adaptable, please contact us.
3) The dimensions depend on the motor.
4) Smaller motor shaft diameter is compensated by a bushing with a minimum thickness of 1 mm.

⚠ Motor mounting according to operating manual

			3-stage													
Ratio [a]	i		**64**	**84**	**100**	**125**	**140**	**175**	**200**	**250**	**280**	**350**	**400**	**500**	**700**	**1000**
Max. acceleration torque (max. 1000 cycles per hour)	T_{2B}	Nm	1200	1200	1500	1500	1500	1500	1500	1500	1600	1600	840	1050	1470	1400
		in.lb	10620	10620	13275	13275	13275	13275	13275	13275	14160	14160	7434	9293	13010	12390
Nominal output torque (with n_{1N})	T_{2N}	Nm	700	700	950	950	950	950	950	950	1120	1250	640	750	1120	800
		in.lb	6195	6195	8408	8408	8408	8408	8408	8408	9912	11063	5664	6638	9912	7080
Emergency stop torque (permitted 1000 times during the service life of the gearhead)	T_{2Not}	Nm	1600	1600	2500	2500	2500	2500	2500	2500	2750	2750	1600	2000	2750	2750
		in.lb	14160	14160	22125	22125	22125	22125	22125	22125	24338	24338	14160	17700	24338	24338
Nominal input speed (with T_{2N} and 20 °C ambient temperature) [b), c)]	n_{1N}	rpm	2900	2900	2900	2900	2900	2900	2900	3200	2900	3200	3900	3900	3900	3900
Max. continuous speed (with 20 % T_{2N} and 20 °C ambient temperature)	n_{1Ncym}	rpm	4000	4000	4000	4000	4000	4000	4000	4000	4000	4000	4200	4200	4200	4200
Max. input speed	n_{1Max}	rpm	4500	4500	4500	4500	4500	4500	4500	4500	4500	4500	4500	4500	4500	4500
Mean no load running torque (with n_1 = 3000 rpm and 20 °C gearhead temperature) [d)]	T_{012}	Nm	1	0.5	0.8	0.6	0.6	0.5	0.5	0.4	0.5	0.4	0.4	0.4	0.4	0.4
		in.lb	8.9	4.4	7.1	5.3	5.3	4.4	4.4	3.5	4.4	3.5	3.5	3.5	3.5	3.5
Max. torsional backlash	j_t	arcmin	Standard ≤ 4 / Reduced ≤ 2													
Torsional rigidity	C_{t21}	Nm/ arcmin	269	252	336	346	336	346	336	346	400	407	274	341	404	389
		in.lb/ arcmin	2381	2230	2974	3062	2974	3062	2974	3062	3540	3602	2425	3018	3575	3443
Tilting rigidity	C_{2K}	Nm/ arcmin	1452													
		in.lb/ arcmin	12850													
Max. axial force [e)]	F_{2AMax}	N	10050													
		lb_f	2261													
Max. tilting moment	M_{2KMax}	Nm	3064													
		in.lb	27116													
Efficiency at full load	η	%	92													
Service life (For calculation, see the Chapter "Information")	L_h	h	> 20000													
Weight incl. standard adapter plate	m	kg	45,4													
		lb_m	100,3													
Operating noise (with n_1 = 3000 rpm no load)	L_{PA}	dB(A)	< 70													
Max. permitted housing temperature		°C	90													
		F	194													
Ambient temperature		°C	0 to +40													
		F	32 to 104													
Lubrication			Lubricated for life													
Paint			Blue RAL 5002													
Direction of rotation			Motor and gearhead opposite directions													
Protection class			IP 65													
Moment of inertia (relates to the drive) **Clamping hub diameter [mm]**	G 24	J_1	kgcm²	3.97	2.82	3.36	3.22	2.82	2.75	2.50	2.47	2.50	2.44	2.42	2.42	2.42	2.42
			10^{-3} in.lb.s²	3.51	2.50	2.97	2.85	2.50	2.43	2.21	2.19	2.21	2.16	2.14	2.14	2.14	2.14
	K 38	J	kgcm²	10.90	9.74	10.30	10.10	9.74	9.66	9.41	9.38	9.41	9.38	9.33	9.33	9.33	9.33
			10^{-3} in.lb.s²	9.65	8.62	9.12	8.94	8.62	8.55	8.33	8.30	8.33	8.30	8.26	8.26	8.26	8.26

Please contact us for information on the best configuration for S1 conditions of use (continuous operation).

[a)] Other ratios available on request
[b)] Higher speeds are possible if the nominal torque is reduced
[c)] For higher ambient temperatures, please reduce input speed
[d)] Idling torques decrease during operation
[e)] Refers to center of the output shaft or flange

All technical data for front output side applies.
Please request information for rear output side versions.

3-stage:

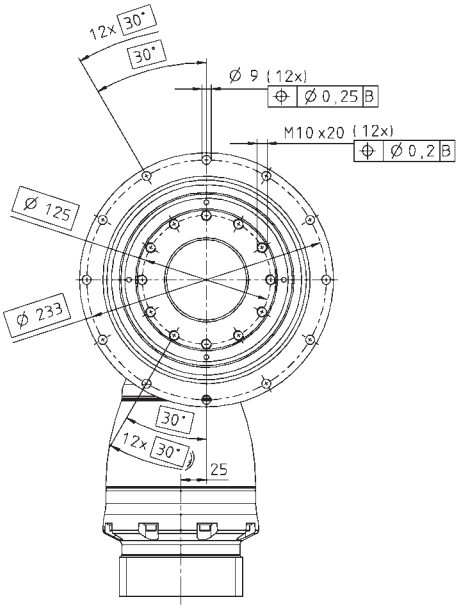

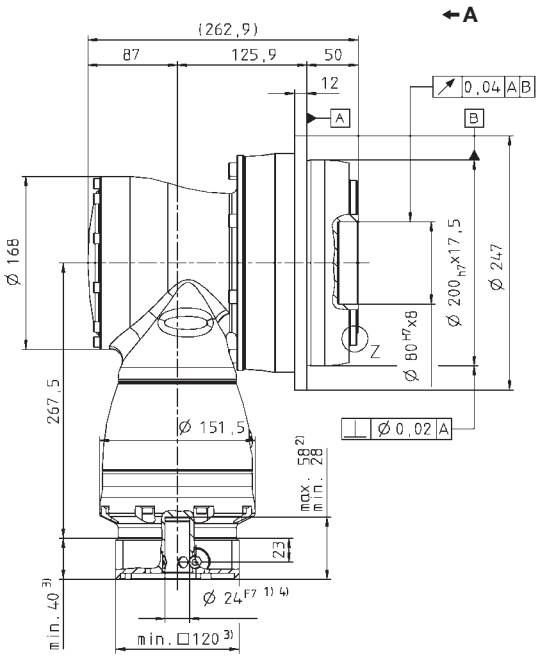

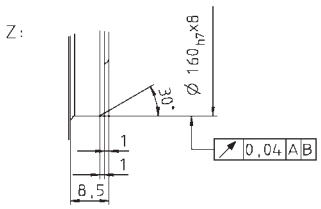

See technical data sheet for available clamping hub diameters (mass moment of inertia). Dimensions available on request.

Non-tolerated dimensions ±1 mm

1) Check motor shaft fit.
2) Min./Max. permissible motor shaft length. Longer motor shafts are adaptable, please contact us.
3) The dimensions depend on the motor.
4) Smaller motor shaft diameter is compensated by a bushing with a minimum thickness of 1 mm.

⚠ Motor mounting according to operating manual

TPK+ 110 MA HIGH TORQUE® 3/4-stage

					3-stage							4-stage								
Ratio [a]			i		**66**	**88**	**110**	**137,5**	**154**	**220**	**385**	**330**	**462**	**577,5**	**770**	**1078**	**1540**	**2695**	**3850**	**5500**
Max. acceleration torque (max. 1000 cycles per hour)			T_{2B}	Nm	3100	3100	3100	3100	3100	2750	3100	3100	3100	3100	3100	3100	3100	3100	3100	2000
				in.lb	27435	27435	27435	27435	27435	24338	27435	27435	27435	27435	27435	27435	27435	27435	27435	17700
Nominal output torque (with n_{1N})			T_{2N}	Nm	1650	1650	1650	1650	1650	1650	1650	1650	1650	1650	1650	1650	1650	1650	1650	1400
				in.lb	14603	14603	14603	14603	14603	14603	14603	14603	14603	14603	14603	14603	14603	14603	14603	12390
Emergency stop torque (permitted 1000 times during the service life of the gearhead)			T_{2Not}	Nm	4800	5700	5700	6500	5600	5500	6500	4800	6500	6000	6500	6500	6500	6500	6500	6500
				in.lb	42480	50445	50445	57525	49560	48675	57525	42480	57525	53100	57525	57525	57525	57525	57525	57525
Nominal input speed (with T_{2N} and 20 °C ambient temperature) [b), c)]			n_{1N}	rpm	2100	2300	2600	2600	2400	2400	2400	3000	3000	3000	3000	3000	3000	4100	4100	4100
Max. continuous speed (with 20 % T_{2N} and 20 °C ambient temperature)			n_{1Ncym}	rpm	2800	3200	3600	3600	3200	3200	3200	3800	3800	3800	3800	3800	3800	4000	4000	4000
Max. input speed			n_{1Max}	rpm	4500	4500	4500	4500	4500	4500	4500	4500	4500	4500	4500	4500	4500	4500	4500	4500
Mean no load running torque (with n_1 = 3000 rpm and 20 °C gearhead temperature) [d)]			T_{012}	Nm	6.0	4.6	3.6	-	4.4	3.5	-	0.9	-	-	-	-	-	-	-	-
				in.lb	53.1	40.7	31.9	-	38.9	31.0	-	8.0	-	-	-	-	-	-	-	-
Max. torsional backlash			j_t	arcmin	≤ 1,3															
Torsional rigidity			C_{t21}	Nm/ arcmin	634	642	654	675	654	648	687	634	682	662	667	685	685	689	687	658
				in.lb/ arcmin	5614	5681	5789	5976	5789	5739	6083	5614	6037	5855	5902	6062	6062	6101	6083	5822
Max. axial force [e)]			F_{2AMax}	N	1452															
				lb_f	12850															
Max. radial force [e)]			F_{2RMax}	N	10050															
				lb_f	2261															
Max. tilting moment			M_{2KMax}	Nm	3280															
				in.lb	29028															
Efficiency at full load			η	%	92							90								
Service life (For calculation, see the Chapter "Information")			L_h	h	> 20000															
Weight incl. standardadapter plate			m	kg	-															
				lb_m																
Operating noise (with n_1 = 3000 rpm no load)			L_{PA}	dB(A)	≤ 70															
Max. permitted housing temperature				°C	+90															
				F	+194															
Ambient temperature				°C	0 to +40															
				F	32 to 104															
Lubrication					Lubricated for life															
Paint					Blue RAL 5002															
Direction of rotation					Motor and gearhead opposite directions															
Protection class					IP 65															
Moment of inertia (relates to the drive)	**E**	**19**	J_1	kgcm²	-	-	-	-	-	-	-	0.89	1.06	0.76	0.76	0.76	0.69	0.68	0.68	0.68
				10^{-3} in.lb.s²	-	-	-	-	-	-	-	0.79	0.94	0.68	0.67	0.67	0.61	0.61	0.60	0.60
Clamping hub diameter [mm]	**G**	**24**	J_1	kgcm²	-	-	-	-	-	-	-	2.46	2.63	2.33	2.32	2.32	2.26	2.25	2.25	2.25
				10^{-3} in.lb.s²	-	-	-	-	-	-	-	2.17	2.33	2.06	2.06	2.05	2.00	1.99	1.99	1.99
	H	**28**	J_1	kgcm²	5.48	4.27	3.64	3.58	3.14	2.87	2.84	-	-	-	-	-	-	-	-	-
				10^{-3} in.lb.s²	4.85	3.78	3.22	3.17	2.78	2.54	2.51	-	-	-	-	-	-	-	-	-
	K	**38**	J_1	kgcm²	12.72	11.52	10.89	10.83	10.39	10.12	10.09	-	-	-	-	-	-	-	-	-
				10^{-3} in.lb.s²	11.26	10.19	9.64	9.58	9.19	8.95	8.93	-	-	-	-	-	-	-	-	-

Please contact us for information on the best configuration for S1 conditions of use (continuous operation).

[a)] Other ratios available on request
[b)] Higher speeds are possible if the nominal torque is reduced
[c)] For higher ambient temperatures, please reduce input speed
[d)] Idling torques decrease during operation
[e)] Refers to center of the output shaft or flange

All technical data for front output side applies.
Please request information for rear output side versions.

View A

3-stage:

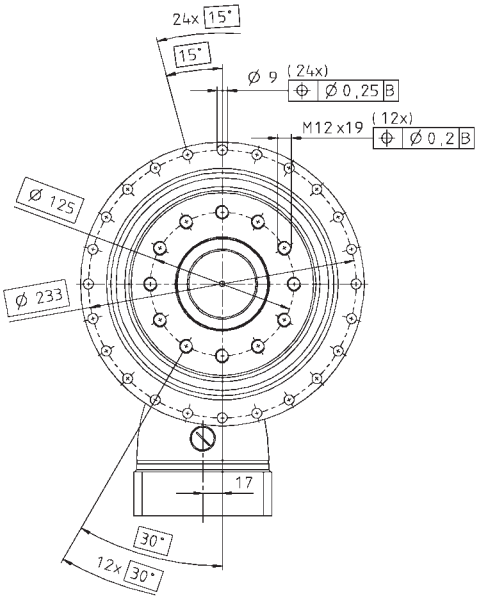

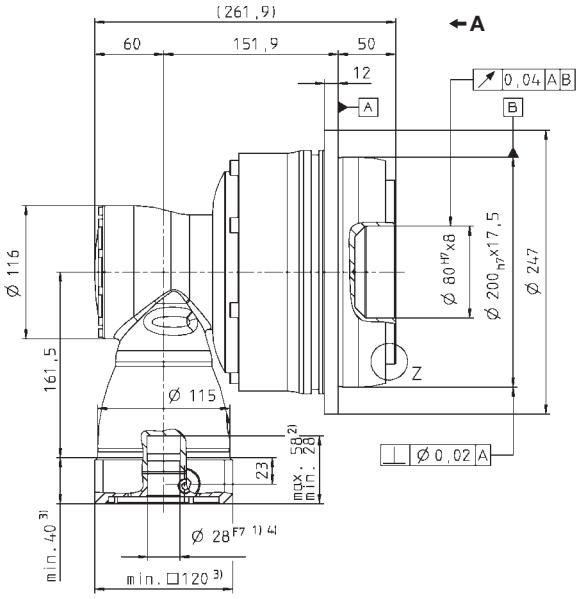

4-stage:

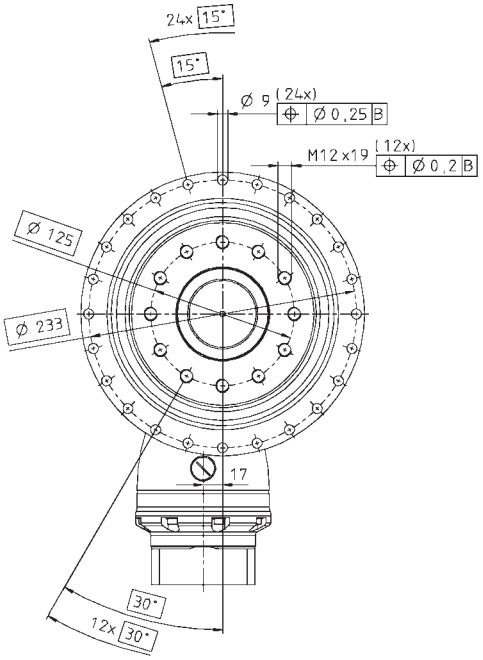

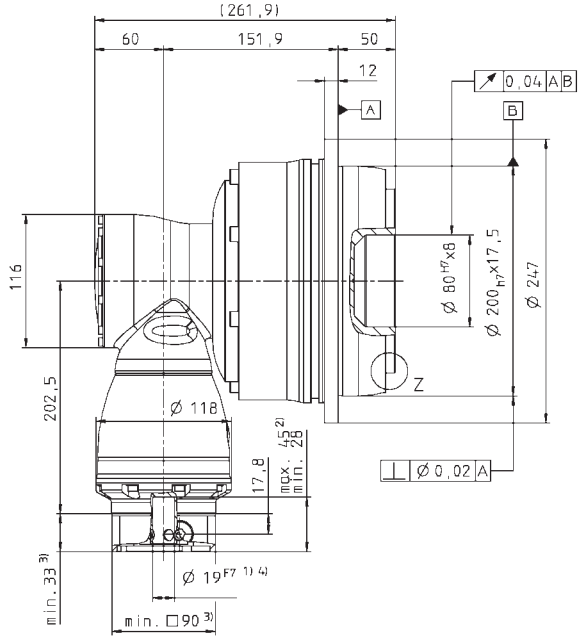

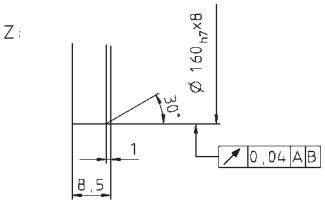

See technical data sheet for available clamping hub diameters (mass moment of inertia). Dimensions available on request.

Non-tolerated dimensions ±1 mm

1) Check motor shaft fit.
2) Min./Max. permissible motor shaft length. Longer motor shafts are adaptable, please contact us.
3) The dimensions depend on the motor.
4) Smaller motor shaft diameter is compensated by a bushing with a minimum thickness of 1 mm.

⚠ Motor mounting according to operating manual

TPK+ 300 MF 2-stage

				2-stage							
Ratio [a]	i			**15**	**20**	**25**	**35**	**49**	**50**	**70**	**100**
Max. acceleration torque (max. 1000 cycles per hour)	T_{2B}	Nm		3200	3200	3200	3300	3300	2350	3300	2800
		in.lb		28320	28320	28320	29205	29205	20798	29205	24780
Nominal output torque (with n_{1N})	T_{2N}	Nm		2000	2000	2000	1800	1800	1800	1800	1600
		in.lb		17.700	17.700	17.700	15.930	15.930	15.930	15.930	14.160
Emergency stop torque (permitted 1000 times during the service life of the gearhead)	T_{2Not}	Nm		4500	5250	5250	7350	6800	4500	6300	8750
		in.lb		39825	46463	46463	65048	60180	39825	55755	77438
Nominal input speed (with T_{2N} and 20 °C ambient temperature) [b), c)]	n_{1N}	rpm		1500	1700	1900	1900	1700	1700	1700	1700
Max. continuous speed (with 20 % T_{2N} and 20 °C ambient temperature)	n_{1Ncym}	rpm		1900	2300	2700	2700	2400	2400	2400	2400
Max. input speed	n_{1Max}	rpm		4000	4000	4000	4000	4000	4000	4000	4000
Mean no load running torque (with n_1 = 3000 rpm and 20 °C gearhead temperature) [d)]	T_{012}	Nm		18.5	15.0	13.0	12.0	12.0	15.0	14.0	13.0
		in.lb		163.7	132.8	115.1	106.2	106.2	132.8	123.9	115.1
Max. torsional backlash	j_t	arcmin		Standard ≤ 4 / Reduced ≤ 2							
Torsional rigidity	C_{t21}	Nm/ arcmin		615	640	664	730	728	658	727	642
		in.lb/ arcmin		5.443	5.664	5.876	6.461	6.443	5.823	6.434	5.682
Tilting rigidity	C_{2K}	Nm/ arcmin		5560							
		in.lb/ arcmin		49206							
Max. axial force [e)]	F_{2AMax}	N		33000							
		lb_f		7425							
Max. tilting moment	M_{2KMax}	Nm		5900							
		in.lb		52215							
Efficiency at full load	η	%		94							
Service life (For calculation, see the Chapter "Information")	L_h	h		> 20000							
Weight incl. standard adapter plate	m	kg		–							
		lb_m									
Operating noise (with n_1 = 3000 rpm no load)	L_{PA}	dB(A)		≤ 71							
Max. permitted housing temperature		°C		+90							
		F		+194							
Ambient temperature		°C		0 to +40							
		F		32 to 104							
Lubrication				Lubricated for life							
Paint				Blue RAL 5002							
Direction of rotation				Motor and gearhead opposite directions							
Protection class				IP 65							
Moment of inertia (relates to the drive) Clamping hub diameter [mm]	M	48	J_1	kgcm²	74.00	52.00	43.00	43.00	35.00	30.00	30.00	30.00
				10^{-3} in.lb.s²	65.49	46.02	38.06	38.06	30.98	26.55	26.55	26.55

Please contact us for information on the best configuration for S1 conditions of use (continuous operation).

[a)] Other ratios available on request
[b)] Higher speeds are possible if the nominal torque is reduced
[c)] For higher ambient temperatures, please reduce input speed
[d)] Idling torques decrease during operation
[e)] Refers to center of the output shaft or flange

All technical data for front output side applies.
Please request information for rear output side versions.

2-stage:

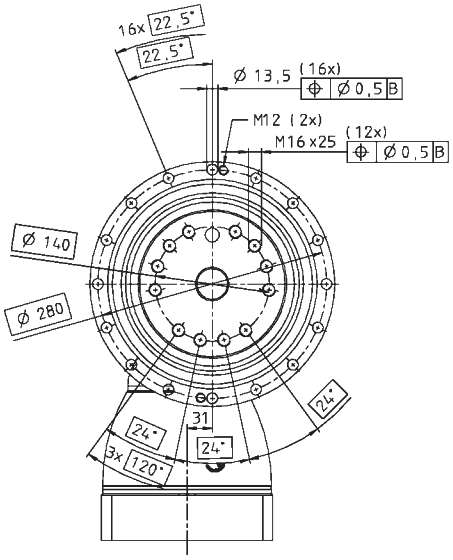

←A

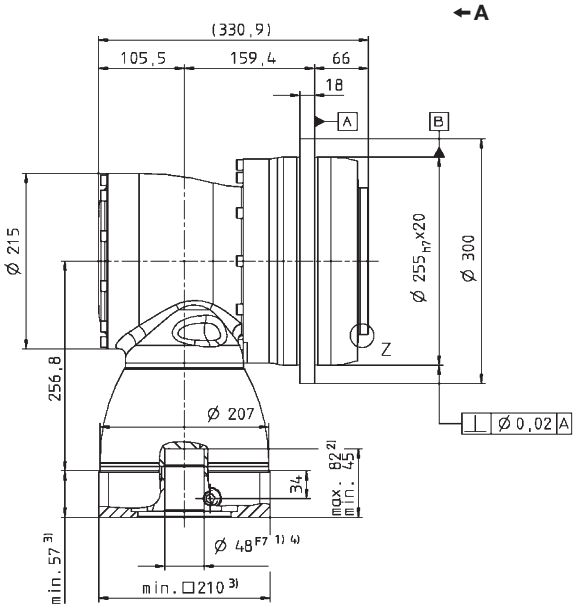

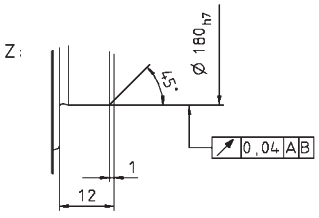

See technical data sheet for available clamping hub diameters (mass moment of inertia). Dimensions available on request.

Non-tolerated dimensions ±1 mm

1) Check motor shaft fit.
2) Min./Max. permissible motor shaft length. Longer motor shafts are adaptable, please contact us.
3) The dimensions depend on the motor.
4) Smaller motor shaft diameter is compensated by a bushing with a minimum thickness of 1 mm.

⚠ Motor mounting according to operating manual

				3-stage											
Ratio [a]			*i*	**63**	**100**	**125**	**140**	**175**	**200**	**250**	**280**	**350**	**500**	**700**	**1000**
Max. acceleration torque (max. 1000 cycles per hour)			T_{2B} Nm	3300	3200	3200	3200	3200	3200	3200	3300	3300	2350	3300	2800
			in.lb	29205	28320	28320	28320	28320	28320	28320	29205	29205	20798	29205	24780
Nominal output torque (with n_{1N})			T_{2N} Nm	1800	2000	2000	2000	2000	2000	2000	1800	1800	1800	1800	1600
			in.lb	15.930	17.700	17.700	17.700	17.700	17.700	17.700	15.930	15.930	15.930	15.930	14.160
Emergency stop torque (permitted 1000 times during the service life of the gearhead)			T_{2Not} Nm	6300	5250	5250	5250	5250	5250	5250	7350	7350	4500	6300	8750
			in.lb	55755	46463	46463	46463	46463	46463	46463	65048	65048	39825	55755	77438
Nominal input speed (with T_{2N} and 20 °C ambient temperature) [b), c)]			n_{1N} rpm	2700	2700	2700	2700	2700	2700	2900	2700	2900	3400	3400	3400
Max. continuous speed (with 20 % T_{2N} and 20 °C ambient temperature)			n_{1Ncym} rpm	3200	3500	3500	3500	3500	3500	3500	3500	3500	3800	3800	3800
Max. input speed			n_{1Max} rpm	4000	4000	4000	4000	4000	4000	4000	4000	4000	4000	4000	4000
Mean no load running torque (with n_1 = 3000 rpm and 20 °C gearhead temperature) [d)]			T_{012} Nm	5.4	3.0	2.5	2.1	1.9	1.5	1.4	1.3	1.2	1.1	1.1	1.0
			in.lb	47.8	26.6	22.1	18.6	16.8	13.3	12.4	0.0	10.6	9.7	9.7	8.9
Max. torsional backlash			j_t arcmin	Standard ≤ 4 / Reduced ≤ 2											
Torsional rigidity			C_{t21} Nm/ arcmin	699	640	664	640	664	640	664	715	730	658	727	642
			in.lb/ arcmin	6.186	5.664	5.876	5.664	5.876	5.664	5.876	6.328	6.461	5.823	6.434	5.682
Tilting rigidity			C_{2K} Nm/ arcmin	5560											
			in.lb/ arcmin	49210											
Max. axial force [e)]			F_{2AMax} N	33000											
			lb_f	7425											
Max. tilting moment			M_{2KMax} Nm	5900											
			in.lb	52215											
Efficiency at full load			η %	92											
Service life (For calculation, see the Chapter "Information")			L_h h	> 20000											
Weight incl. standard adapter plate			*m* kg	–											
			lb_m												
Operating noise (with n_1 = 3000 rpm no load)			L_{PA} dB(A)	≤ 71											
Max. permitted housing temperature			°C	+90											
			F	+194											
Ambient temperature			°C	0 to +40											
			F	32 to 104											
Lubrication				Lubricated for life											
Paint				Blue RAL 5002											
Direction of rotation				Motor and gearhead opposite directions											
Protection class				IP 65											
Moment of inertia (relates to the drive) Clamping hub diameter [mm]	K	38	J_1 kgcm²	17.80	14.10	12.10	11.00	10.80	10.20	10.10	10.10	10.00	9.90	9.90	9.90
			10^{-3} in.lb.s²	15.75	12.48	10.71	9.74	9.56	9.03	8.94	8.94	8.85	8.76	8.76	8.76
	M	48	*J* kgcm²	32.50	28.80	26.80	25.70	25.50	24.90	24.80	24.90	24.80	24.60	24.60	24.60
			10^{-3} in.lb.s²	28.76	25.49	23.72	22.74	22.57	22.04	21.95	22.04	21.95	21.77	21.77	21.77

Please contact us for information on the best configuration for S1 conditions of use (continuous operation).

[a)] Other ratios available on request
[b)] Higher speeds are possible if the nominal torque is reduced
[c)] For higher ambient temperatures, please reduce input speed
[d)] Idling torques decrease during operation
[e)] Refers to center of the output shaft or flange

All technical data for front output side applies.
Please request information for rear output side versions.

3-stage:

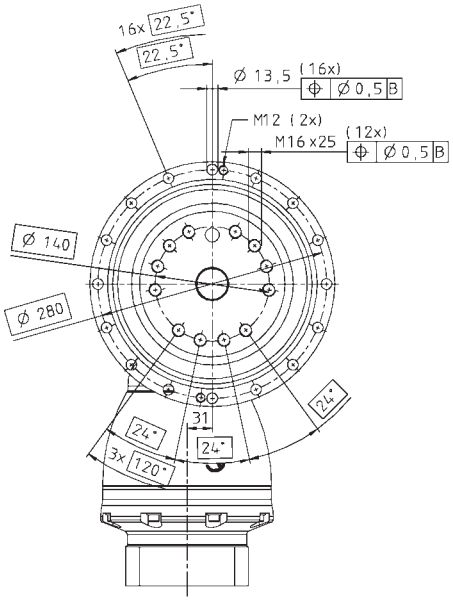

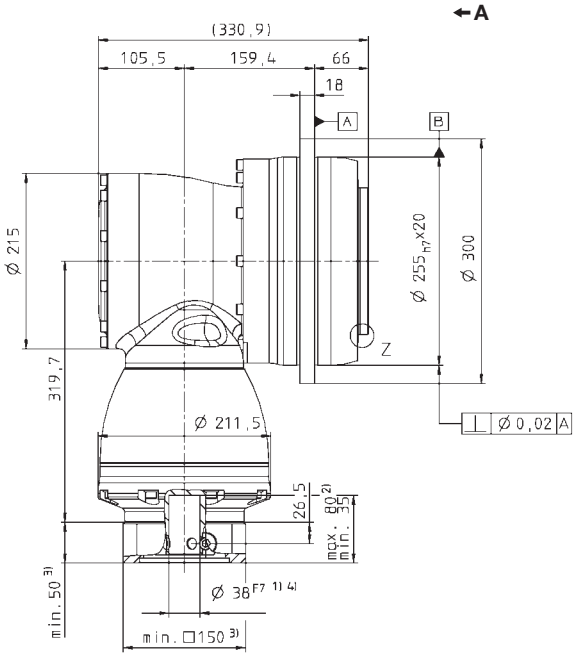

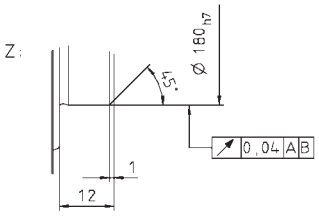

See technical data sheet for available clamping hub diameters (mass moment of inertia). Dimensions available on request.

Non-tolerated dimensions ±1 mm

1) Check motor shaft fit.
2) Min./Max. permissible motor shaft length. Longer motor shafts are adaptable, please contact us.
3) The dimensions depend on the motor.
4) Smaller motor shaft diameter is compensated by a bushing with a minimum thickness of 1 mm.

⚠ Motor mounting according to operating manual

TPK+ 300 MA HIGH TORQUE® 3/4-stage

				3-stage							4-stage								
Ratio [a]			***i***	**66**	**88**	**110**	**137.5**	**154**	**220**	**385**	**330**	**462**	**577.5**	**770**	**1078**	**1540**	**2695**	**3850**	**5500**
Max. acceleration torque (max. 1000 cycles per hour)			T_{2B} Nm	5500	5500	5500	5500	5500	4600	5500	5500	5500	5500	5500	5500	5500	5500	5500	3900
			in.lb	48675	48675	48675	48675	48675	40710	48675	48675	48675	48675	48675	48675	48675	48675	48675	34515
Nominal output torque (with n_{1N})			T_{2N} Nm	3500	3500	3500	3500	3500	3500	3500	3500	3500	3500	3500	3500	3500	3500	3500	3500
			in.lb	30975	30975	30975	30975	30975	30975	30975	30975	30975	30975	30975	30975	30975	30975	30975	30975
Emergency stop torque (permitted 1000 times during the service life of the gearhead)			T_{2Not} Nm	8800	11000	11000	11000	9900	8800	13250	8800	13250	11000	13250	13250	13250	13250	13250	13250
			in.lb	77880	97350	97350	97350	87615	77880	117263	77880	117263	97350	117263	117263	117263	117263	117263	117263
Nominal input speed (with T_{2N} and 20 °C ambient temperature) [b), c)]			n_{1N} rpm	1800	1900	2100	2100	1900	1900	1900	2800	2800	2800	2800	2800	2800	3100	3800	3800
Max. continuous speed (with 20 % T_{2N} and 20 °C ambient temperature)			n_{1Ncym} rpm	2300	2600	2900	2900	2600	2600	2600	3800	3800	3800	3800	3800	3800	4000	4000	4000
Max. input speed			n_{1Max} rpm	4500	4500	4500	4500	4500	4500	4500	4500	4500	4500	4500	4500	4500	4500	4500	4500
Mean no load running torque (with n_1 = 3000 rpm and 20 °C gearhead temperature) [d)]			T_{012} Nm	11.0	8.2	6.9	6.5	9.2	6.7	6.4	1.5	2.2	1.0	0.9	0.8	0.6	0.4	0.4	0.4
			in.lb	97.4	72.6	61.1	57.5	81.4	59.3	56.6	13.3	19.5	8.9	8.0	7.1	5.3	3.5	3.5	3.5
Max. torsional backlash			j_t arcmin	Standard ≤ 3,3 / Reduced ≤ 1,8															
Torsional rigidity			C_{t21} Nm/ arcmin	1099	1108	1114	960	1114	1111	979	1099	976	953	958	978	978	979	979	989
			in.lb/ arcmin	9727	9809	9856	8499	9856	9834	8662	9727	8634	8437	8476	8655	8655	8667	8662	8757
Max. axial force [e)]			F_{2AMax} N	5560															
			lb_f	49210															
Max. radial force [e)]			F_{2RMax} N	33000															
			lb_f	7425															
Max. tilting moment			M_{2KMax} Nm	6500															
			in.lb	57525															
Efficiency at full load			η %	92							90								
Service life (For calculation, see the Chapter "Information")			L_h h	> 20000															
Weight incl. standardadapter plate			*m* kg	–															
			lb_m																
Operating noise (with n_1 = 3000 rpm no load)			L_{PA} dB(A)	≤ 71															
Max. permitted housing temperature			°C	+90															
			F	+194															
Ambient temperature			°C	0 to +40															
			F	32 to 104															
Lubrication				Lubricated for life															
Paint				Blue RAL 5002															
Direction of rotation				Motor and gearhead opposite directions															
Protection class				IP 65															
Moment of inertia (relates to the drive) Clamping hub diameter [mm]	G	24	J_1 kgcm²	-	-	-	-	-	-	-	3.32	4.24	2.80	2.79	2.79	2.49	2.43	2.42	2.42
			10^{-3} in.lb.s²	-	-	-	-	-	-	-	2.94	3.75	2.48	2.47	2.47	2.20	2.15	2.14	2.14
	K	38	J_1 kgcm²	26.04	19.71	16.71	16.58	14.26	12.89	12.83	10.23	11.15	9.71	9.70	9.70	9.40	9.34	9.33	9.33
			10^{-3} in.lb.s²	23.05	17.44	14.78	14.67	12.62	11.41	11.36	9.06	9.87	8.59	8.59	8.58	8.32	8.27	8.26	8.26

Please contact us for information on the best configuration for S1 conditions of use (continuous operation).

[a)] Other ratios available on request
[b)] Higher speeds are possible if the nominal torque is reduced
[c)] For higher ambient temperatures, please reduce input speed
[d)] Idling torques decrease during operation
[e)] Refers to center of the output shaft or flange

All technical data for front output side applies.
Please request information for rear output side versions.

3-stage:

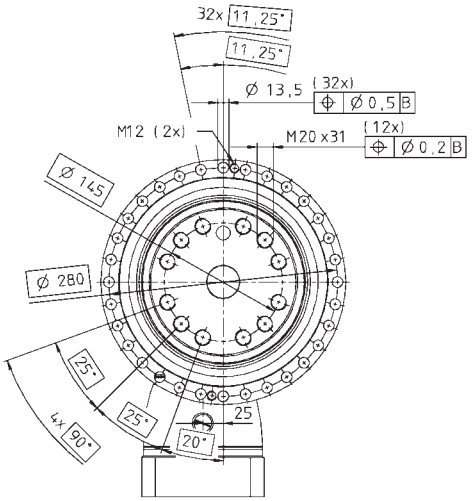

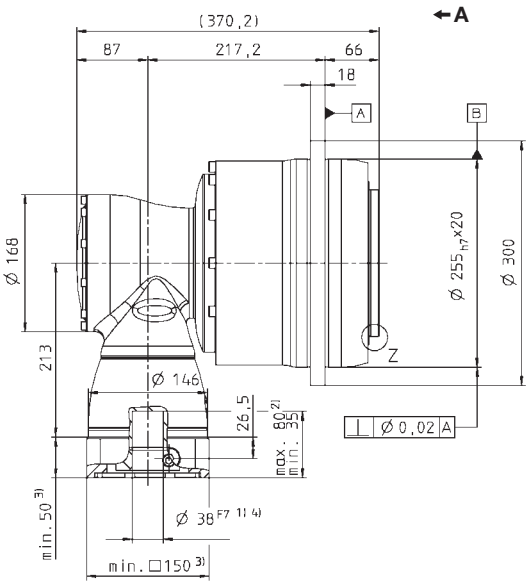

4-stage:

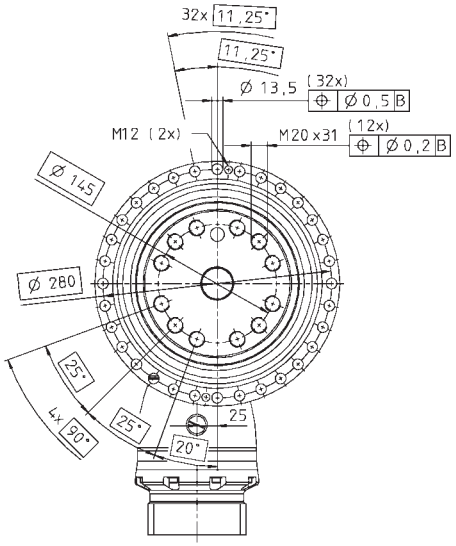

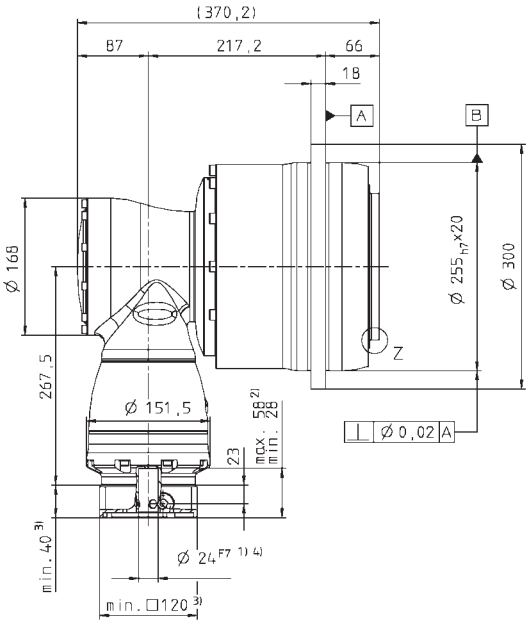

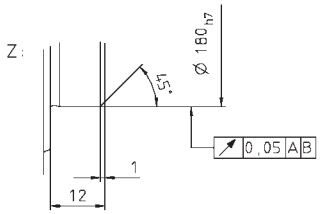

See technical data sheet for available clamping hub diameters (mass moment of inertia). Dimensions available on request.

Non-tolerated dimensions ±1 mm

1) Check motor shaft fit.
2) Min./Max. permissible motor shaft length. Longer motor shafts are adaptable, please contact us.
3) The dimensions depend on the motor.
4) Smaller motor shaft diameter is compensated by a bushing with a minimum thickness of 1 mm.

⚠ Motor mounting according to operating manual

TPK+ 500 MF 3-stage

			3-stage									
Ratio [a]	i		**100**	**125**	**140**	**175**	**200**	**250**	**350**	**500**	**700**	**1000**
Max. acceleration torque (max. 1000 cycles per hour)	T_{2B}	Nm	6000	6000	5000	6000	4200	5250	6000	4500	5000	4800
		in.lb	53100	53100	44250	53100	37170	46463	53100	39825	44250	42480
Nominal output torque (with n_{1N})	T_{2N}	Nm	3350	3800	3350	3800	3350	3800	3800	2900	2800	2900
		in.lb	29648	33630	29648	33630	29648	33630	33630	25665	24780	25665
Emergency stop torque (permitted 1000 times during the service life of the gearhead)	T_{2Not}	Nm	10000	12500	9000	11250	8000	10000	14000	15000	15000	15000
		in.lb	88500	110625	79650	99563	70800	88500	123900	132750	132750	132750
Nominal input speed (with T_{2N} and 20 °C ambient temperature) [b), c)]	n_{1N}	rpm	2600	2600	2300	2300	2300	2300	2300	2300	2300	2300
Max. continuous speed (with 20 % T_{2N} and 20 °C ambient temperature)	n_{1Ncym}	rpm	3500	3500	3100	3100	3000	3000	3000	3000	3000	3000
Max. input speed	n_{1Max}	rpm	4500	4500	4500	4500	4500	4500	4500	4500	4500	4500
Mean no load running torque (with n_1 = 3000 rpm and 20 °C gearhead temperature) [d)]	T_{012}	Nm	5.5	5.5	8.5	8.5	6.0	6.0	6.0	6.0	6.0	6.0
		in.lb	48.7	48.7	75.2	75.2	53.1	53.1	53.1	53.1	53.1	53.1
Max. torsional backlash	j_t	arcmin	Standard ≤ 3,3 / Reduced ≤ 2,3									
Torsional rigidity	C_{t21}	Nm/ arcmin	1250	1350	1250	1350	1250	1350	1350	1280	1240	1050
		in.lb/ arcmin	11063	11948	11063	11948	11063	11948	11948	11328	10974	9293
Tilting rigidity	C_{2K}	Nm/ arcmin	9480									
		in.lb/ arcmin	83898									
Max. axial force [e)]	F_{2AMax}	N	50000									
		lb_f	11250									
Max. tilting moment	M_{2KMax}	Nm	8800									
		in.lb	77880									
Efficiency at full load	η	%	92									
Service life (For calculation, see the Chapter "Information")	L_h	h	> 20000									
Weight incl. standard adapter plate	m	kg	–									
		lb_m										
Operating noise (with n_1 = 3000 rpm no load)	L_{PA}	dB(A)	≤ 71									
Max. permitted housing temperature		°C	+90									
		F	+194									
Ambient temperature		°C	0 to +40									
		F	32 to 104									
Lubrication			Lubricated for life									
Paint			Blue RAL 5002									
Direction of rotation			Motor and gearhead opposite directions									
Protection class			IP 65									
Moment of inertia (relates to the drive) **Clamping hub diameter [mm]** K 38	J_1	$kgcm^2$	16.70	16.70	16.50	16.50	16.40	16.40	16.40	16.40	16.40	16.40
		10^{-3} in.lb.s²	14.78	14.78	14.60	14.60	14.51	14.51	14.51	14.51	14.51	14.51

Please contact us for information on the best configuration for S1 conditions of use (continuous operation).

[a)] Other ratios available on request
[b)] Higher speeds are possible if the nominal torque is reduced
[c)] For higher ambient temperatures, please reduce input speed
[d)] Idling torques decrease during operation
[e)] Refers to center of the output shaft or flange

All technical data for front output side applies.
Please request information for rear output side versions.

View A

3-stage:

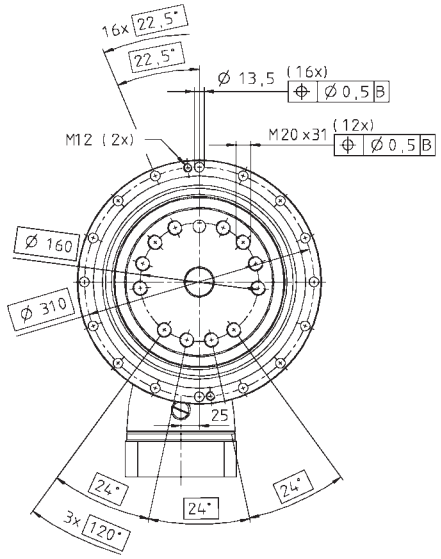

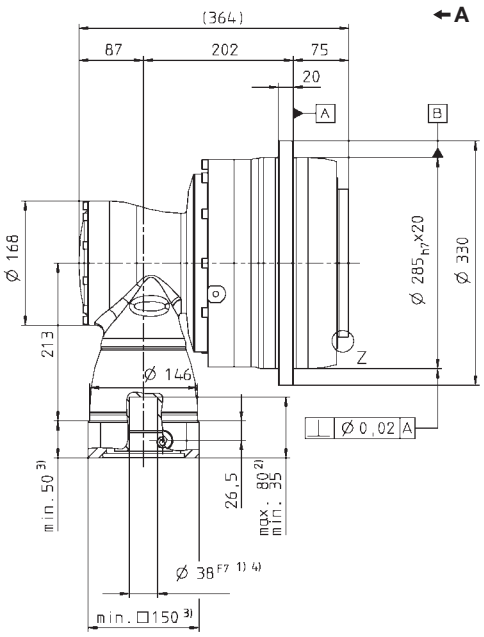

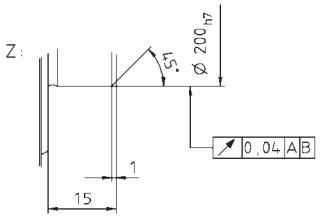

See technical data sheet for available clamping hub diameters (mass moment of inertia). Dimensions available on request.

Non-tolerated dimensions ±1 mm

1) Check motor shaft fit.
2) Min./Max. permissible motor shaft length. Longer motor shafts are adaptable, please contact us.
3) The dimensions depend on the motor.
4) Smaller motor shaft diameter is compensated by a bushing with a minimum thickness of 1 mm.

⚠ Motor mounting according to operating manual

TPK+ 500 MF 4-stage i=180-1000

				4-stage											
Ratio [a]			***i***	**180**	**240**	**300**	**375**	**420**	**500**	**560**	**600**	**700**	**800**	**875**	**1000**
Max. acceleration torque (max. 1000 cycles per hour)			T_{2B} Nm	6000	6000	6000	6000	6000	6000	6000	6000	6000	6000	6000	6000
			T_{2B} in.lb	53100	53100	53100	53100	53100	53100	53100	53100	53100	53100	53100	53100
Nominal output torque (with n_{1N})			T_{2N} Nm	3350	3350	3350	3800	3350	3350	3350	3350	3350	3350	3800	3350
			T_{2N} in.lb	29648	29648	29648	33630	29648	29648	29648	29648	29648	29648	33630	29648
Emergency stop torque (permitted 1000 times during the service life of the gearhead)			T_{2Not} Nm	10000	10000	10000	12500	10000	10000	10000	10000	10000	10000	12500	10000
			T_{2Not} in.lb	88500	88500	88500	110625	88500	88500	88500	88500	88500	88500	110625	88500
Nominal input speed (with T_{2N} and 20 °C ambient temperature) [b), c)]			n_{1N} rpm	2700	2900	2900	2900	2900	2900	2900	2900	2900	2900	2900	3200
Max. continuous speed (with 20 % T_{2N} and 20 °C ambient temperature)			n_{1Ncym} rpm	3800	4000	4000	4000	4000	4000	4000	4000	4000	4000	4000	4200
Max. input speed			n_{1Max} rpm	4500	4500	4500	4500	4500	4500	4500	4500	4500	4500	4500	4500
Mean no load running torque (with n_1 = 3000 rpm and 20 °C gearhead temperature) [d)]			T_{012} Nm	3.4	2.5	1.6	1.4	1.1	1	1	0.8	0.8	0.7	0.7	0.6
			T_{012} in.lb	30.1	22.1	14.2	12.4	9.7	8.9	8.9	7.1	7.1	6.2	6.2	5.3
Max. torsional backlash			j_t arcmin	Standard ≤ 3,3 / Reduced ≤ 2,3											
Torsional rigidity			C_{t21} Nm/ arcmin	1250	1250	1250	1300	1250	1350	1250	1250	1262	1250	1350	1250
			C_{t21} in.lb/ arcmin	11063	11063	11063	11505	11063	11948	11063	11063	11169	11063	11948	11063
Tilting rigidity			C_{2K} Nm/ arcmin	9480											
			C_{2K} in.lb/ arcmin	83906											
Max. axial force [e)]			F_{2AMax} N	50000											
			F_{2AMax} lb_f	11250											
Max. tilting moment			M_{2KMax} Nm	8800											
			M_{2KMax} in.lb	77880											
Efficiency at full load			η %	90											
Service life (For calculation, see the Chapter "Information")			L_h h	> 20000											
Weight incl. standard adapter plate			m kg	–											
			m lb_m												
Operating noise (with n_1 = 3000 rpm no load)			L_{PA} dB(A)	≤ 71											
Max. permitted housing temperature			°C	+90											
			F	+194											
Ambient temperature			°C	0 to +40											
			F	32 to 104											
Lubrication				Lubricated for life											
Paint				Blue RAL 5002											
Direction of rotation				Motor and gearhead opposite directions											
Protection class				IP 65											
Moment of inertia (relates to the drive) Clamping hub diameter [mm]	G	24	J_1 kgcm²	5.93	4.29	3.33	3.32	2.81	3.19	2.80	2.50	2.74	2.49	2.74	2.46
			J_1 10^{-3} in.lb.s²	5.25	3.79	2.95	2.94	2.49	2.82	2.48	2.21	2.42	2.20	2.42	2.18
	K	38	J kgcm²	12.84	11.18	10.24	10.23	9.72	10.10	9.71	9.41	9.65	9.40	9.65	9.37
			J 10^{-3} in.lb.s²	11.37	9.89	9.06	9.06	8.60	8.94	8.59	8.33	8.54	8.32	8.54	8.29

Please contact us for information on the best configuration for S1 conditions of use (continuous operation).

[a)] Other ratios available on request
[b)] Higher speeds are possible if the nominal torque is reduced
[c)] For higher ambient temperatures, please reduce input speed
[d)] Idling torques decrease during operation
[e)] Refers to center of the output shaft or flange

All technical data for front output side applies.
Please request information for rear output side versions.

View A

4-stage:

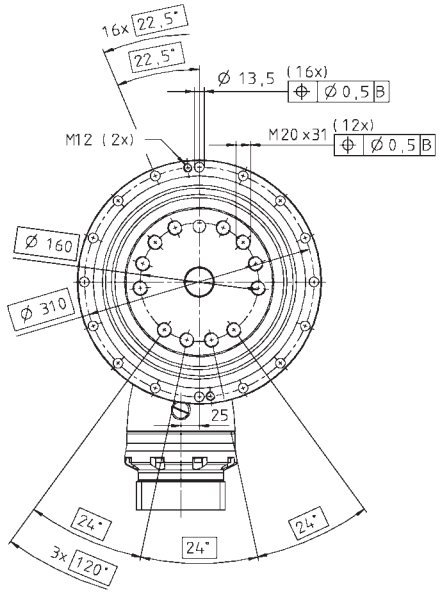

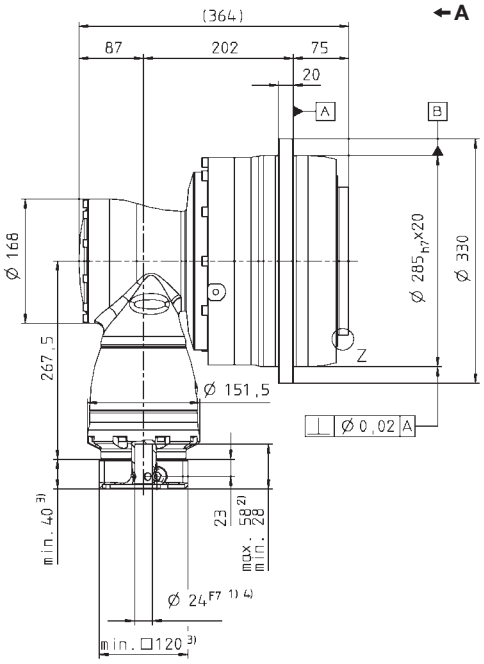

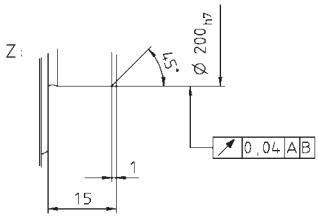

See technical data sheet for available clamping hub diameters (mass moment of inertia). Dimensions available on request.

Non-tolerated dimensions ±1 mm

1) Check motor shaft fit.
2) Min./Max. permissible motor shaft length. Longer motor shafts are adaptable, please contact us.
3) The dimensions depend on the motor.
4) Smaller motor shaft diameter is compensated by a bushing with a minimum thickness of 1 mm.

⚠ Motor mounting according to operating manual

TPK+ 500 MF 4-stage i=1225-10000

				4-stage								
Ratio [a]			***i***	**1225**	**1400**	**1750**	**2000**	**2800**	**3500**	**5000**	**7000**	**10000**
Max. acceleration torque (max. 1000 cycles per hour)			T_{2B} Nm	6000	6000	6000	4200	5000	6000	4500	5000	4800
			T_{2B} in.lb	53100	53100	53100	37170	44250	53100	39825	44250	42480
Nominal output torque (with n_{1N})			T_{2N} Nm	3800	3800	3800	3200	2800	3800	2900	2800	2900
			T_{2N} in.lb	33630	33630	33630	28320	24780	33630	25665	24780	25665
Emergency stop torque (permitted 1000 times during the service life of the gearhead)			T_{2Not} Nm	15000	15000	15000	8000	11200	14000	15000	15000	15000
			T_{2Not} in.lb	132750	132750	132750	70800	99120	123900	132750	132750	132750
Nominal input speed (with T_{2N} and 20 °C ambient temperature) [b), c)]			n_{1N} rpm	2900	2900	3200	3900	3900	3900	3900	3900	3900
Max. continuous speed (with 20 % T_{2N} and 20 °C ambient temperature)			n_{1Ncym} rpm	4000	4000	4200	4200	4200	4200	4200	4200	4200
Max. input speed			n_{1Max} rpm	4500	4500	4500	4500	4500	4500	4500	4500	4500
Mean no load running torque (with n_1 = 3000 rpm and 20 °C gearhead temperature) [d)]			T_{012} Nm	0.6	0.6	0.4	0.4	0.4	0.4	0.4	0.4	0.4
			T_{012} in.lb	5.3	5.3	3.5	3.5	3.5	3.5	3.5	3.5	3.5
Max. torsional backlash			j_t arcmin	Standard ≤ 3,3 / Reduced ≤ 2,3								
Torsional rigidity			C_{t21} Nm/ arcmin	1350	1350	1350	1250	1250	1350	1250	1250	1050
			C_{t21} in.lb/ arcmin	11948	11948	11948	11063	11063	11948	11063	11063	9293
Tilting rigidity			C_{2K} Nm/ arcmin	9480								
			C_{2K} in.lb/ arcmin	83906								
Max. axial force [e)]			F_{2AMax} N	50000								
			F_{2AMax} lb_f	11250								
Max. tilting moment			M_{2KMax} Nm	8800								
			M_{2KMax} in.lb	77880								
Efficiency at full load			η %	90								
Service life (For calculation, see the Chapter "Information")			L_h h	> 20000								
Weight incl. standard adapter plate			m kg	–								
			m lb_m									
Operating noise (with n_1 = 3000 rpm no load)			L_{PA} dB(A)	≤ 71								
Max. permitted housing temperature			°C	+90								
			F	+194								
Ambient temperature			°C	0 to +40								
			F	32 to 104								
Lubrication				Lubricated for life								
Paint				Blue RAL 5002								
Direction of rotation				Motor and gearhead opposite directions								
Protection class				IP 65								
Moment of inertia (relates to the drive) Clamping hub diameter [mm]	G	24	J_1 kgcm²	2.73	2.49	2.46	2.42	2.42	2.42	2.42	2.42	2.42
			J_1 10^{-3} in.lb.s²	2.42	2.20	2.17	2.14	2.14	2.14	2.14	2.14	2.14
	K	38	J kgcm²	9.64	9.40	9.37	9.33	9.33	9.33	9.33	9.33	9.33
			J 10^{-3} in.lb.s²	8.53	8.32	8.29	8.26	8.26	8.26	8.26	8.26	8.26

Please contact us for information on the best configuration for S1 conditions of use (continuous operation).

[a)] Other ratios available on request
[b)] Higher speeds are possible if the nominal torque is reduced
[c)] For higher ambient temperatures, please reduce input speed
[d)] Idling torques decrease during operation
[e)] Refers to center of the output shaft or flange

All technical data for front output side applies.
Please request information for rear output side versions.

View A

4-stage:

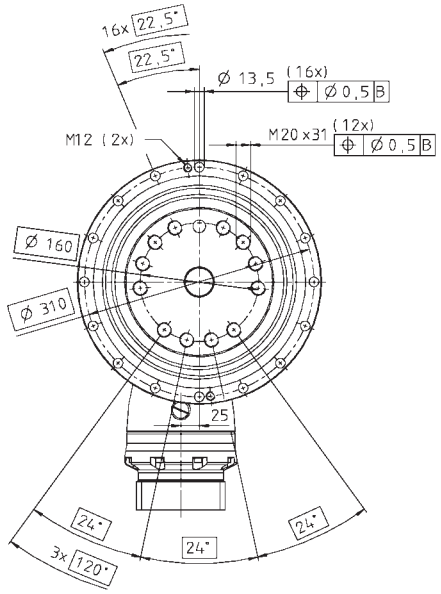

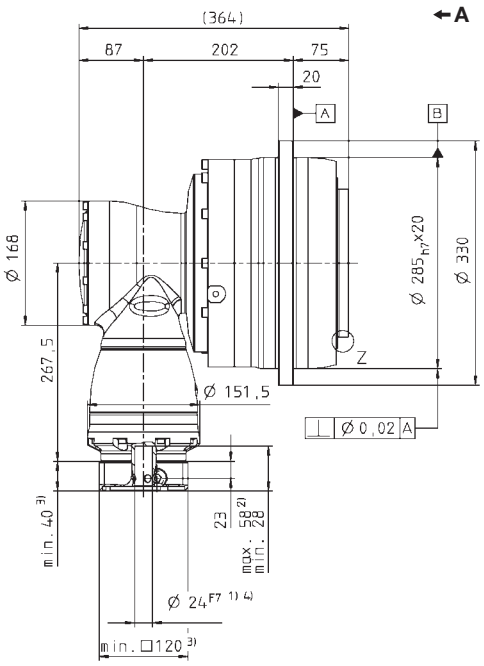

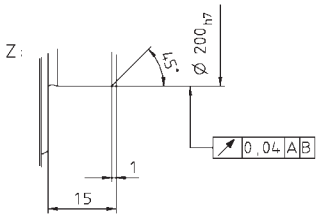

See technical data sheet for available clamping hub diameters (mass moment of inertia). Dimensions available on request.

Non-tolerated dimensions ±1 mm

1) Check motor shaft fit.
2) Min./Max. permissible motor shaft length. Longer motor shafts are adaptable, please contact us.
3) The dimensions depend on the motor.
4) Smaller motor shaft diameter is compensated by a bushing with a minimum thickness of 1 mm.

⚠ Motor mounting according to operating manual

TPK+ 500 MA HIGH TORQUE® 3/4-stage

				3-stage							4-stage								
Ratio [a]			***i***	**66**	**88**	**110**	**137,5**	**154**	**220**	**385**	**330**	**462**	**577,5**	**770**	**1078**	**1540**	**2695**	**3850**	**5500**
Max. acceleration torque (max. 1000 cycles per hour)			T_{2B} Nm	10000	10000	10000	10000	10000	10000	10000	10000	10000	10000	10000	10000	10000	10000	10000	7200
			in.lb	88500	88500	88500	88500	88500	88500	88500	88500	88500	88500	88500	88500	88500	88500	88500	63720
Nominal output torque (with n_{1N})			T_{2N} Nm	4200	5400	5400	5400	5400	5400	5400	5400	5400	5400	5400	5400	5400	5400	5400	5400
			in.lb	37170	47790	47790	47790	47790	47790	47790	47790	47790	47790	47790	47790	47790	47790	47790	47790
Emergency stop torque (permitted 1000 times during the service life of the gearhead)			T_{2Not} Nm	19800	23000	23000	25000	21300	19800	25000	19800	25000	25000	25000	25000	25000	25000	25000	25000
			in.lb	175230	203550	203550	221250	188505	175230	221250	175230	221250	221250	221250	221250	221250	221250	221250	221250
Nominal input speed (with T_{2N} and 20 °C ambient temperature) [b), c)]			n_{1N} rpm	1500	1700	1900	1900	1700	1700	1700	2600	2600	2600	2600	2600	2600	3100	3300	3300
Max. continuous speed (with 20 % T_{2N} and 20 °C ambient temperature)			n_{1Ncym} rpm	1800	2200	2600	2600	2300	2300	3100	3300	3300	3300	3300	3300	3300	3600	3600	3600
Max. input speed			n_{1Max} rpm	4000	4000	4000	4000	4000	4000	4000	4000	4000	4000	4000	4000	4000	4000	4000	4000
Mean no load running torque (with n_1 = 3000 rpm and 20 °C gearhead temperature) [d)]			T_{012} Nm	20.5	16.5	13.6	12.8	17.6	14.3	13.7	3.0	4.0	2.0	1.8	1.7	1.2	1.1	1.0	1.0
			in.lb	181.4	146.0	120.4	113.3	155.8	126.6	121.2	26.6	35.4	17.7	15.9	15.0	10.6	9.7	8.9	8.9
Max. torsional backlash			j_t arcmin	Standard ≤ 3,3 / Reduced ≤ 1,8															
Torsional rigidity			C_{t21} Nm/ arcmin	1879	1890	1901	1747	1899	1898	1772	1879	1766	1735	1742	1770	1770	1772	1772	1786
			in.lb/ arcmin	16626	16727	16820	15464	16809	16799	15683	16626	15633	15359	15413	15662	15662	15686	15683	15808
Max. axial force [e)]			F_{2AMax} N	9480															
			lb_f	83906															
Max. radial force [e)]			F_{2RMax} N	50000															
			lb_f	11250															
Max. tilting moment			M_{2KMax} Nm	9500															
			in.lb	84075															
Efficiency at full load			η %	92							90								
Service life (For calculation, see the Chapter "Information")			L_h h	> 20000															
Weight incl. standardadapter plate			m kg	–															
			lb_m																
Operating noise (with n_1 = 3000 rpm no load)			L_{PA} dB(A)	≤ 71															
Max. permitted housing temperature			°C	+90															
			F	+194															
Ambient temperature			°C	0 to +40															
			F	32 to 104															
Lubrication				Lubricated for life															
Paint				Blue RAL 5002															
Direction of rotation				Motor and gearhead opposite directions															
Protection class				IP 65															
Moment of inertia (relates to the drive) Clamping hub diameter [mm]	K	38	J_1 kgcm²	-	-	-	-	-	-	-	12.43	15.36	10.93	10.92	10.91	10.13	9.95	9.91	9.91
			10^{-3} in.lb.s²	-	-	-	-	-	-	-	11.00	13.59	9.67	9.66	9.66	8.96	8.81	8.77	8.77
	M	48	J_1 kgcm²	75.54	52.83	42.94	42.67	34.37	29.87	29.73	27.14	30.07	25.64	25.63	25.62	24.84	24.66	24.62	24.62
			10^{-3} in.lb.s²	66.85	46.76	38.01	37.76	30.41	26.43	26.31	24.02	26.61	22.69	22.68	22.68	21.98	21.83	21.79	21.79

Please contact us for information on the best configuration for S1 conditions of use (continuous operation).

[a)] Other ratios available on request
[b)] Higher speeds are possible if the nominal torque is reduced
[c)] For higher ambient temperatures, please reduce input speed
[d)] Idling torques decrease during operation
[e)] Refers to center of the output shaft or flange

All technical data for front output side applies.
Please request information for rear output side versions.

3-stage:

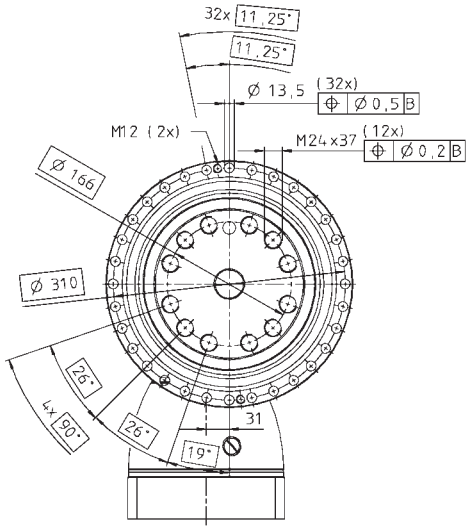

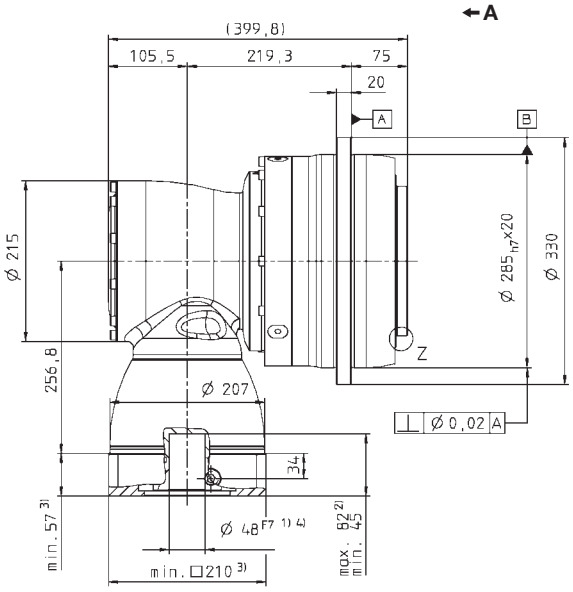

4-stage:

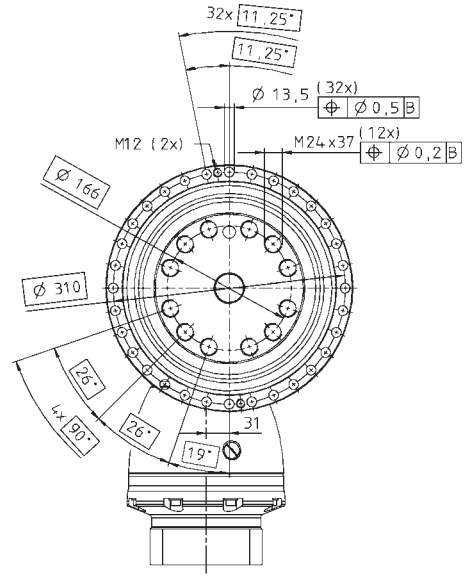

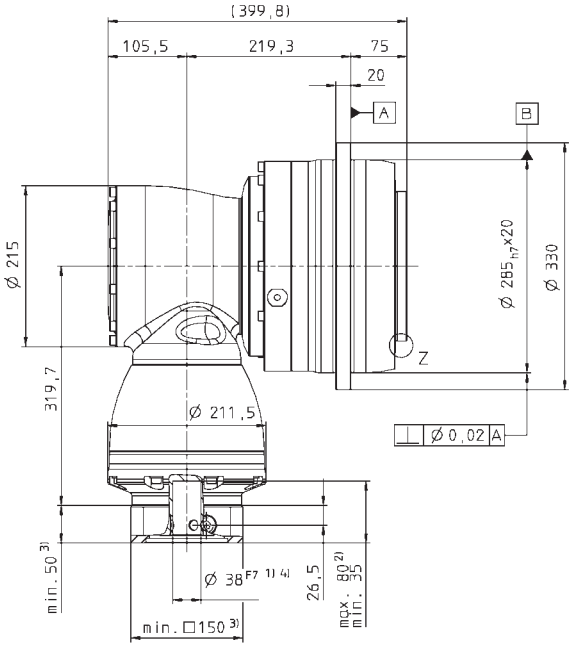

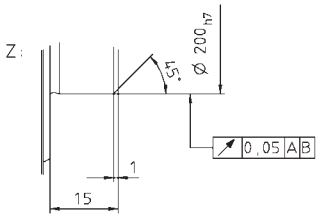

See technical data sheet for available clamping hub diameters (mass moment of inertia). Dimensions available on request.

Non-tolerated dimensions ±1 mm

1) Check motor shaft fit.
2) Min./Max. permissible motor shaft length. Longer motor shafts are adaptable, please contact us.
3) The dimensions depend on the motor.
4) Smaller motor shaft diameter is compensated by a bushing with a minimum thickness of 1 mm.

⚠ Motor mounting according to operating manual